ICS 43.040.99
CCS T 35

NATIONAL STANDARD OF THE PEOPLE'S REPUBLIC OF CHINA
中华人民共和国国家标准

GB/T 18487.1-2023
Replace GB/T 18487.1-2015

电动汽车传导充电系统
第 1 部分：通用要求
Electric vehicles conductive charging system
Part 1: General requirements

Issued on 2023-09-07 **Implemented on 2024-04-01**

Issued by the State Administration for Market Regulation and the Standardization Administration (SAC) of the People's Republic of China

Internal use only, not for resale or public post. www.gbstandards.org

CONTENTS

Foreword 4

Introduction 5

1 Scope 6

2 Normative references 7

3 Terms and definitions 9

4 Classification 36

5 General requirements for charging systems 38

6 Communication 43

7 Electric shock protection 43

8 Connection between electric vehicles and electric vehicle energy transfer 50

9 Vehicle adaptor 51

10 Special requirements for vehicle coupler and EV plug and socket-outlet 51

11 Structural requirements for electric vehicle energy transfer equipment 54

12 Performance requirements for electric vehicle energy transfer equipment 59

13 Overload protection and short circuit protection 64

14 Emergency shutdown 65

15 Service conditions 65

16 Maintenance 67

17 Identification and Description 67

Annex A (normative) Control pilot circuit and control principle of AC charging 69

Annex B (normative) DC charging control pilot circuit and control principle using the charging connection device specified in GB/T 20234.3 97

Annex C (normative) DC charging control pilot circuit and control principle using the charging connection device specified in GB/T 20234.4 110

Annex D (informative) Voltage adaptive switching of vehicle power supply circuit 151

Annex E (informative) V2G DC charging and discharging technology scheme using the charging connection device specified in GB/T 20234.4 154

Annex F (normative) DC charging technology with multiple vehicle couplers 160

Annex G (normative) DC charging compatibility technology solution for using

Internal use only, not for resale or public post.

vehicle adaptor specified in GB/T 20234.4 165

Annex H (informative) DC charging compatibility technology solution applicable for CHAdeMO 2.x and blow charing system and CCS charging system 176

Annex I (normative) Locking device for charging connection device 182

Annex J (informative) Pulse heating control principle for using the charging connection device specified in GB/T 20234.4.....185

Bibliography 199

Internal use only, not for resale or public post.

Foreword

This document is drafted in accordance with the rules given in GB/T 1.1-2020.

This document is the first part of GB/T 18487, of which the following parts have been issued:

——Electric vehicles conductive charging system Part 1: General requirements (GB/T 18487.1-2023);

——Electric vehicles conductive charging system Part 2: EMC requirements for off-board electric vehicle supply equipment (GB/T 18487.2-20173);

——Electric vehicles conductive charging system Part 3: A.C./D.C. Electric vehicle charging station (GB/T 18487.3-2001).

This Document was proposed by and is under the jurisdiction of China Electricity Council.

The English version hereof has been translated directly from the openly-published Chinese standard GB/T 18487.1-2023.

In the event of any discrepancy in the process of implementation, the Chinese version shall prevail.

Internal use only, not for resale or public post.

Introduction

GB/T 18487 aims to establish the general requirements for electric vehicle and non on-board conductive energy transfer equipment in electric vehicle conductive charging systems, which are proposed to be composed of three parts.

Part 1: General Requirements. The purpose is to standardize the overall principles and related requirements for safety and interoperability that electric vehicles and non on-board conductive energy transfer equipment need to meet.

Part 2: EMC requirements for off-board electric vehicle supply equipment. The purpose is to standardize the electromagnetic compatibility requirements and test methods for non on-board conductive power supply equipment of electric vehicles.

Part 3: A.C./D.C. Electric vehicle charging station. The purpose is to standardize the specific requirements for electric vehicle chargers (stations).

The issuing authority of this document reminds us that when declaring compliance with this document, it may involve the use of patents for control pilot circuits in Annex C.

The issuing authority of this document has no position on the authenticity, validity, or scope of the patent.

Please note that in addition to the aforementioned patents, certain contents of this document may still involve patents. The publishing institution of this document does not assume the responsibility of identifying patents.

Internal use only, not for resale or public post.

Electric vehicles conductive charging system
Part 1: General requirements

1 Scope

This document specifies the classification, general requirements, communication, electric shock protection, connection between electric vehicles and electric vehicle energy transfer equipment, vehicle adaptors, vehicle couplers, special requirements for EV plug and socket-outlets, structural requirements, performance requirements, overload protection and short circuit protection, emergency shutdown, service conditions, maintenance, marking and instructions for electric vehicle energy transfer equipment.

NOTE 1: Without causing confusion, the term "electric vehicle energy transfer equipment" in this document is referred to as "power supply equipment".

This document applies to non on-board conductive power supply equipment with current control and/or voltage control, to achieve unidirectional/bidirectional energy flow between the rechargeable electrical energy storage system of electric vehicles and the supply network (power supply), with a rated voltage on the supply network side (A side) not exceeding 1000 V AC or 1500 V DC, and a rated maximum voltage on the electric vehicle side (B side) not exceeding 1000 V AC or 1500 V DC.

This document also applies to power supply equipment that obtains energy from on-site energy storage systems, such as buffer battery packs.

This document applies to electric vehicles that can be externally charged or bi-directional charged, including battery electric vehicles, externally rechargeable hybrid electric vehicles, and conductive charging or bi-directional charging systems for fuel cell hybrid electric vehicles.

Be used as a reference for the conductive charging or bi-directional charging system for tramcars, railway vehicles, industrial vehicles, etc.

This document does not apply to safety requirements related to the maintenance of conductive charging/bi-directional charging systems for electric vehicles, does not apply to on-board charging equipment specified in GB/T 40432, and does not apply to trolley bus.

The requirements for components other than the key components of electric vehicles specified in this document (vehicle side vehicle inlets, control pilot circuits, and vehicle disconnect devices) shall refer to relevant standards for electric vehicles.

NOTE 2: Refer to GB/T 18487.2-2017 for the requirements for electromagnetic compatibility of non on-board conductive power supply equipment.

NOTE3: See GB/T 40425 (all parts) for the requirements for top contact charging systems.

NOTE4: Refer to GB/T 41589 for the requirements for mode 2 in-cable control and protection devices (IC-CPD).

Internal use only, not for resale or public post. www.gbstandards.org

2 Normative references

The following standards contain provisions which, through reference in this text, constitute provisions of this standard. For dated references, only the edition cited applies. For undated references, the latest edition of the referenced document (including any amendments) applies.

GB/T 1002 Single phase plugs and socket-outlets for household and similar purposes-Types,basic parameters and dimensions

GB/T 1003 Three phases plugs and socket-outlets for household and similar purposes—Types,basic parameters and dimensions

GB/T 2099.1 Plugs and socket-outlets for household and similar purposes-Part 1:General requirements

GB/T 2423.3Environmental testing—Part 2:Testing method-Test Cab:Damp heat,steady state

GB/T 2423.4Environmental testing for electric and electronic products - Part 2: Test method - Test Db: Damp heat，cyclic (12h+12h cycle)

GB/T 7251.1-2013Low-voltage switchgear and controlgear assemblies-Part 1: General rules

GB/T 10963.1Electrical accessories-Circuit-breakers for overcurrent protection for household and similar installations—Part 1:Circuit-breakers for a.c.operation

GB/T 10963 (all parts) Electrical accessories—Circuit-breakers for overcurrent protection for household and similar installations

GB/T 11918.1Plugs,socket-outlet and couplers for industrial purposes-Part 1:General requirements

GB/T 11918.2 Plug, socket-outlets and couplers for industrial purposes—Part 2:Dimensional compatibility and interchangeability requirements for pin and contact-tube accessories

GB/T 12113—2003Methods of measurement of touch current and protective conductor current

GB/T 13539(all parts) Low-voltage fuses

GB/T 13870.1-2022 Effects of current on human beings and livestock—Part 1:General aspects

GB/T 13870.2-2016Effects of current on human beings and livestock—Part 2:Special aspects

GB/T 14048.2Low-voltage switchgear and controlgear—Part 2:Circuit-breakers

GB/T 14048.3Low-voltage switchgear and controlgear - Part 3:Switches disconnectors switch-disconnectors and fuse-combination units

Internal use only, not for resale or public post.

GB/T 14048.4Low-voltage switchgear and controlgear—Part 4-1:Contactors and motor-starters—Electromechanical contactors and motor-starters(Including motor protector)

GB/T 14048.9Low-voltage switchgear and controlgear - Section 6-2: Multiple function equipment control and protective switching devices (or equipment) (CPS)

GB 14050 Types and safety technical requirements of system earthing

GB/T 14285Technical code for relaying protection and security automatic equipment

GB/T 16895.3Low-voltage electrical installations—Part 5-54:Selection and erection of electrical equipment—Earthing arrangements and protective conductors

GB/T 16895.22Low-voltage electrical installations—Part 5-53: Selection and erection of electrical equipment—Devices for protection for safety, isolation, switching,control and monitoring

GB/T 16916.1Residual current operated circuit-breakers without integral overcurrent protection for household and similar uses (RCCB)—Part 1:General rules

GB/T 16917.1Residual current operated circuit-breakers with integral overcurrent protection for household and similar uses (RCBOs)—Part 1:General rules

GB/T 16935.1-2008Insulation coordination for equipment within low-voltage supply systems—Part 1:Principles, requirements and tests

GB/T 17045-2020Protection against electric shock—Common aspects for installations and equipment

GB 18384-2020 Electric vehicles safety requirements

GB/T 18487.2-2017Electric vehicle conductive charging system—Part 2:EMC requirements for off-board electric vehicle supply equipment

GB/T 18802.11Low-voltage surge protective devices (SPD)—Part 11:Surge protective devices connected to low-voltage power systems—Requirements and test methods

GB/T 18802.21Low-voltage surge protective devices—Part 21: Surge protective devices connected to telecommunications and signaling networks—Performance requirements and testing methods

GB/T 19596-2017 Terminology of electric vehicles

GB/T 20234.1-2023 Connection set for conductive charging of electric vehicles—Part 1:General requirements

GB/T 20234.2-2015Connection set for conductive charging of electric vehicles—Part 2:AC charging coupler

GB/T 20234.3-2023 Connection set for conductive charging of electric vehicles—Part 3:DC charging coupler

Internal use only, not for resale or public post.

GB/T 20234.4-2023Connection set of conductive charging for electric vehicles—Part 4:High power DC charging coupler

GB/T 21711.1-2008Electromechanical elementary relays—Part 1:General and safety requirements

GB/T 22794 Type F and type B residual current operated circuit-breakers with and without integral overcurrent protection for household and similar uses

GB/T 27930-2023Digital communication protocols between off-board conductive charger and electric vehicle

GB/T 29317-2021Terminology of electric vehicle charging/battery swap infrastructure

GB/T 32694-2021Plug-in hybrid electric passenger cars—Specifications

GB/T 40432Conductive on-board charger for electric vehicles

GB/T 40820-2021Residual direct current detecting device (RDC-DD) to be used for mode 3 charging of electric vehicles

GB/T 41589 In-cable control and protection device for mode 2 charging of electric road vehicles (IC-CPD)

GB 50057-2010 Code for design protection of structures against lightning

DL/T 584Code for setting of 3kV~110kV relaying protection equipment

DL/T 621 Earthing for AC electrical installations

NB/T 10202 Plugs with thermal protection function for charging mode 2 of electric vehicles

NB/T 10902 20 kW and below off-board DC charger technical conditions and installation requirements

NB/T 33001-2018 Specification for electric vehicle off-board conductive charger

NB/T 33002-2018 Specification for electric vehicle AC charging spot

ISO 17049:2020 Electrically propelled road vehicles—Conductive power transfer—Safety requirements

IEC 62477-1:2016 Safety requirements for power electronic converter systems and equipment—Part 1: General)

3 Terms and definitions

For the purposes of this document, the terminologies and definitions defined in GB/T 19596-2017, GB/T 20234.4-2023, GB/T 29317-2021, GB/T 32694-2021, and the following apply.

3.1 Charging/bi-directional charging system

3.1.1

Charging

Adjust the AC or DC supply network (power supply) to an appropriate voltage/current to provide electricity for the rechargeable electrical energy storage system of electric vehicles.

3.1.2

Bi-directional charging

Adjust the AC or DC supply network (power supply) to an appropriate voltage/current to provide energy for the electric vehicle's rechargeable electrical energy storage system, or use the electric vehicle as the power supply to output the appropriate voltage/current to the AC or DC supply network (power supply), or provide energy for loads, etc.

3.1.3

Conductive charge

The method of charging a battery using electrical conduction.

[Source: GB/T 19596-2017, 3.4.2.1]

3.1.4

Charging modes

The method of connecting an electric vehicle to the supply network (power supply) to provide power to the electric vehicle.

NOTE Mode 1, Mode 2, Mode 3, and Mode 4 are also applicable to charging and discharging.

3.1.4.1

Mode 1

When connecting electric vehicles to the supply network (power supply), plugs and sockets that meet the requirements of GB/T 2099.1 and GB/T 1002 are used on the power side, and conductors with phase, neutral, and earthing protection are used on the power side.

3.1.4.2 3.1.4.2

Mode 2

When connecting electric vehicles to the supply network (power supply), standard plugs/sockets are used on the power side, conductors for phase, neutral, and earthing protection are used on the power side, and in-cable control and protection devices (IC-CPD) are used for charging connections.

3.1.4.3

Mode 3

Internal use only, not for resale or public post.

When connecting electric vehicles to the supply network (power supply), specialized power supply equipment is used to directly connect the electric vehicles to the AC supply network, and control pilot devices are installed on the specialized power supply equipment.

3.1.4.4 3.1.4.4

Mode 4

When connecting electric vehicles to the supply network (power supply), a DC power supply device with control pilot function is used.

3.1.5

Type of connection

The method of connecting electric vehicles to the supply network using cables and connectors.

3.1.5.1

Case A connection

When connecting an electric vehicle to the supply network/equipment, use a cable assembly with a standard plug/EV plug that is permanently connected to the electric vehicle, as shown in Figure 1.

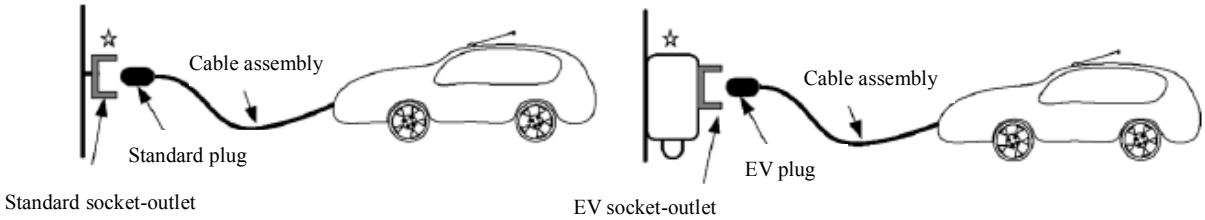

Key

☆Connecting points

NOTECable assembly is the part of electric vehicle.

Figure 1 - Case A connection

3.1.5.2

Case B connection

When connecting electric vehicles to the supply network/supply equipment, use independent detachable cable assemblies with vehicle connectors and standard plugs/EV plugs, as shown in Figure 2.

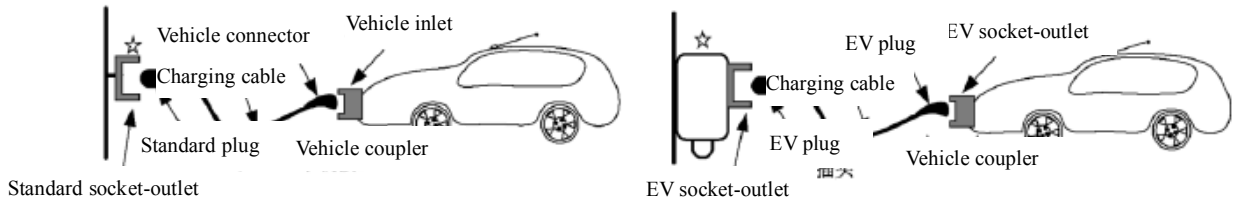

Key

☆Connecting points.

NOTE Detachable cable assembly are not part of electric vehicles or power supply equipment.

Figure 2 – Case B connection

3.1.5.3

Case C connection

When connecting electric vehicles to the supply network, a cable assembly with a vehicle connector that is permanently connected to the power supply equipment is used, as shown in Figure 3.

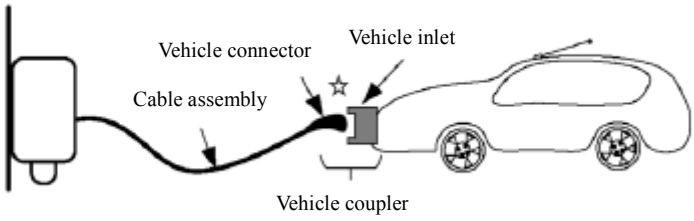

Key

☆ - Connecting point

NOTECable assembly are a part of the power supply equipment.

Figure 3 – Case C connection

3.1.5.4

Case D connection

When connecting electric vehicles to the supply network/supply equipment, a automatic conector coupler composed of the active end of the automatic conector coupler permanently connected to the power supply equipment and the passive end of the automatic conector coupler permanently connected to the electric vehicle is used, as shown in Figure 4.

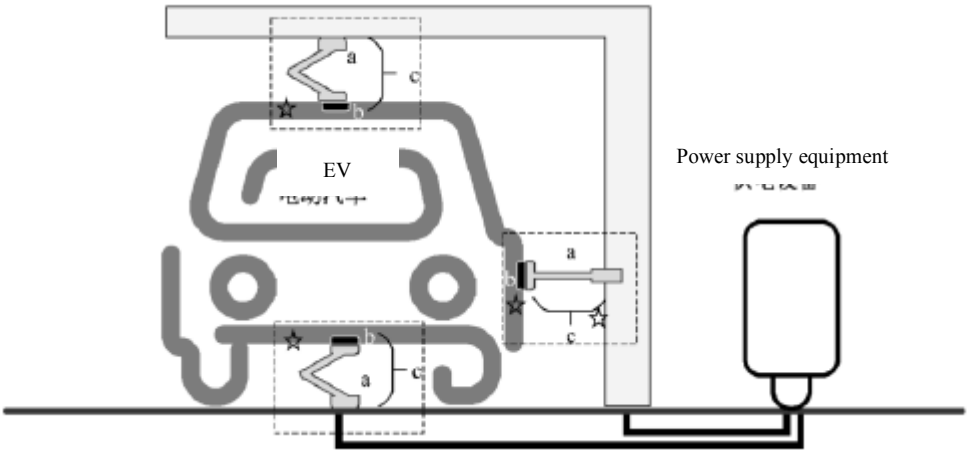

Key

a - Automated conection device (ACD);

b - ACD counterpart;

c - Automatic conector coupler;

☆Connecting points.

The active end of the automatic conector coupler can be installed on the ground (including embedded installation and surface installation), wall mounted installation, and top installation inside buildings.

The vehicle connector in the active end of the automatic conector coupler can be controlled by motion.

Figure 4 - Schematic diagram of case D connection

3.1.5.5

Case E connection

When connecting electric vehicles to the supply network/supply equipment, a automatic conector coupler composed of the active end of the automatic conector coupler permanently connected to the electric vehicle and the passive end of the automatic conector coupler permanently connected to the power supply equipment is used, as shown in Figure 5.

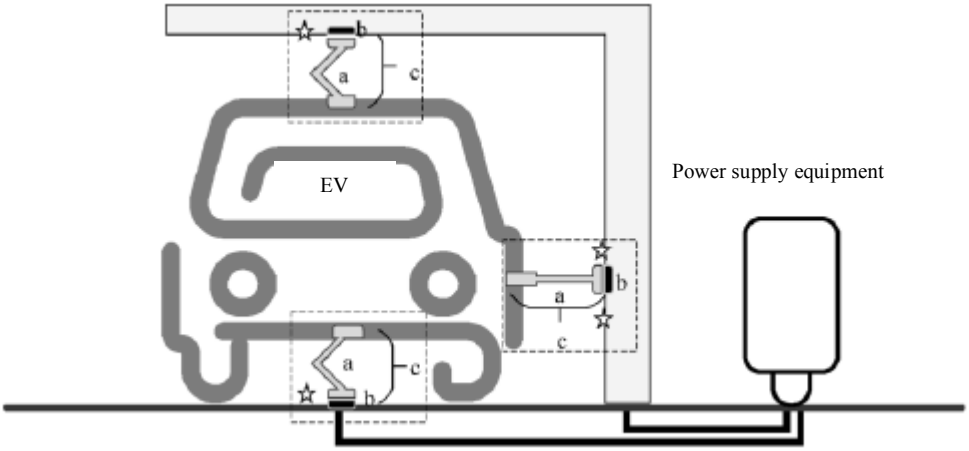

Key

a - Automated conection device (ACD);

b - ACD counterpart;

c- Automatic conector coupler;

☆Connecting points.

The active end of the automatic conector coupler can be installed under the vehicle body, on the side (including front, rear or side installation), wall mounted, or embedded on the top/embedded roof of the building.

The vehicle inlet in the active end of the automatic conector coupler can be controlled by motion.

Figure 5 - Schematic diagram of case E connection

3.1.6

EV energy transfer equipment

A device connected between an electric vehicle and the supply network (power source) that enables energy flow.

NOTE 1: The classification of electric vehicle energy transfer equipment is shown in Figure 6.

NOTE 2: For case A connection (Mode 1 or Mode 3) and case E connection (Mode 3 and Mode 4), the cable assembly is part of the electric vehicle.

NOTE 3: For modes 2 and 3 (case B connection), detachable cable assembly are not part of electric vehicles or power supply equipment.

NOTE 4: For case C connection (Mode 3 or Mode 4), the cable assembly is part of the power supply equipment.

NOTE 5: For case D connection (Mode 3 or Mode 4), the active end of the automatic conector coupler is a part of the power supply equipment.

NOTE 6: For case E connection (Mode 3 or Mode 4), the active end of the automatic conector coupler is part of the electric vehicle.

NOTE 7: The electric vehicle energy transfer equipment described in this document are all power supply equipment.

Internal use only, not for resale or public post.

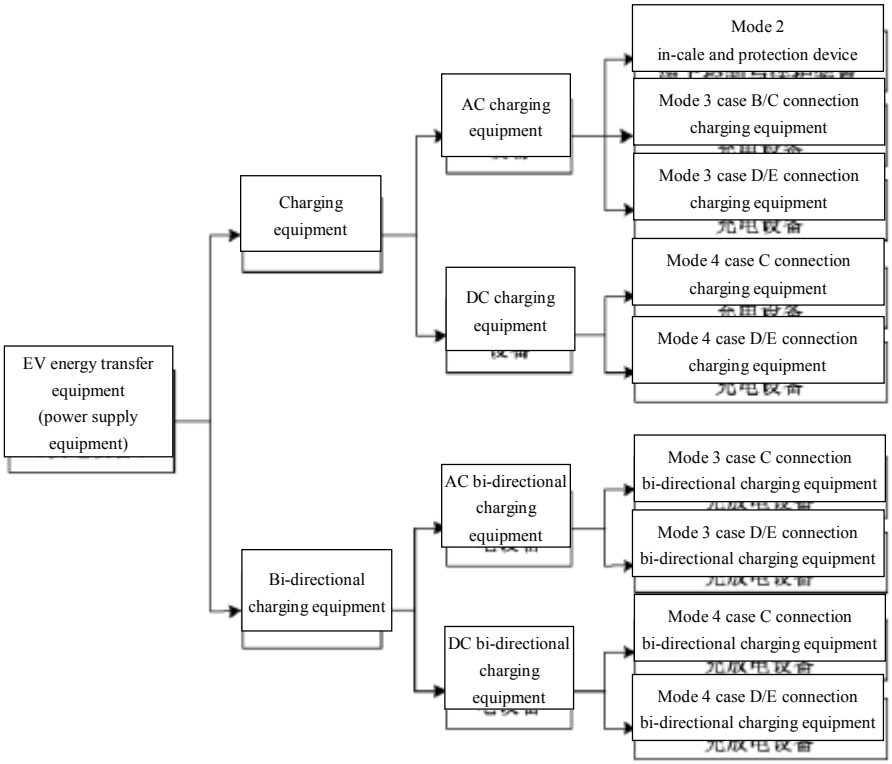

Figure 6 - Schematic diagram of power supply equipment classification

3.1.6.1

Charging equipment

A device that connects to an electric vehicle or power battery through conduction or wireless means to provide electrical energy.

NOTE According to the type of energy transfer current between electric vehicles and charging equipment, they are divided into AC charging equipment and DC charging equipment.

[Source: GB/T 29317-2021,3.2, modified]

3.1.6.2

Charging and discharging equipment

A device connected between an electric vehicle or power battery and the supply network (or load) that enables bidirectional energy flow.

NOTE According to the types of energy transfer currents between electric vehicles and charging and discharging equipment, they are divided into AC charging and discharging equipment and DC charging and discharging equipment.

[Source: GB/T 29317-2021,3.4, modified]

3.1.7

Electric vehicle charging system

Including power supply equipment and systems that meet vehicle charging related

functions.

3.1.7.1

DC electric vehicle charging system

A charging system that provides direct current power for rechargeable electrical energy storage systems in electric vehicles.

NOTE The scope of the DC charging system for electric vehicles specified in this document is shown in Figure 7.

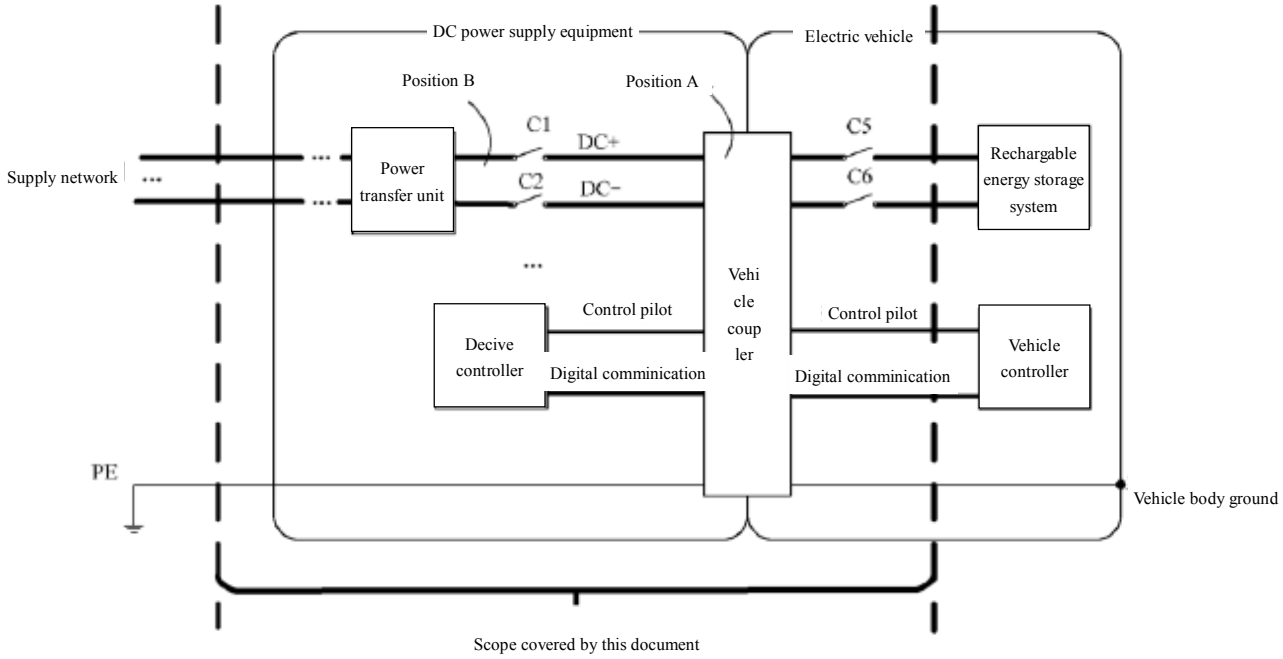

Key

DC+ - Positive of DC power supply circuit;

DC– - Negative of DC power supply circuit;

C1, C2 - DC power supply circuit contactor;

C5, C6 - Vehicle disconnection device (see 3.4.5);

Position A - The reference position of current voltage/current measurement value of the vehicle coupler, the charging voltage/target current of the vehicle coupler (when C5 and C6 are closed), the maximum allowable charging current/total voltage of the vehicle (when C5 and C6 are closed), the maximum/minimum charging voltage of the charger (when C1 and C2 are closed), and the the maximum/minimum charging current of the charger (when C1 and C2 are closed);

Position B - The highest/lowest charging voltage of the charger (when C1 and C2 are closed), the maximum/minimum charging current of the charger (when C1 and C2 are closed), and the current voltage/current measurement at the vehicle coupler, in the case that the voltage drop caused by cable length, cable impedance, and temperature rise can be ignored.

Figure 7 - Scope of DC charging system for electric vehicles specified in this document

Internal use only, not for resale or public post.

3.1.7.2

AC electric vehicle charging system

A charging system that provides AC power for electric vehicle on-board chargers.

Note: The scope of the AC charging system for electric vehicles specified in this document is shown in Figure 8.

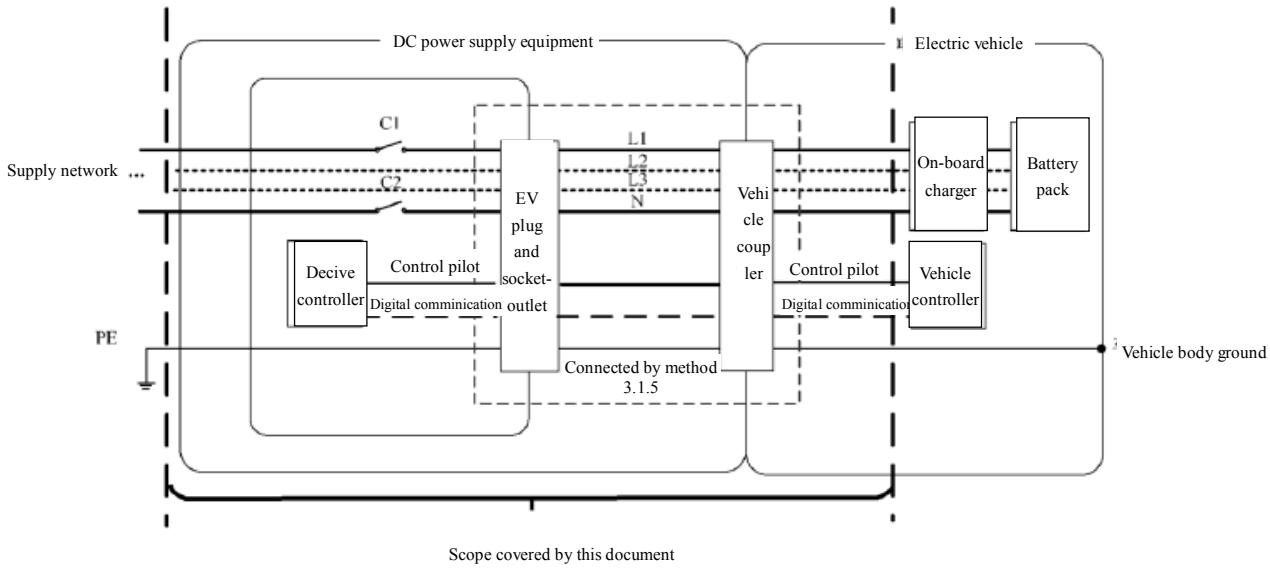

Key

L1, (L2, L3) -AC power phase line;

N -Neutral or neutral line of AC power supply;

C1, C2… - AC contactors/relays.

EV plug and socket-outlet corresponds to Case A connection or case B connection; The vehicle coupler corresponds to case B connection or case C connection.

NOTE Digital communication is optional for modes 2 and 3.

Figure 8 - Scope of AC charging system for electric vehicles specified in this document

3.1.8

Electric vehicle bi-directional charging system

Including electric vehicle charging and discharging equipment and systems that meet vehicle charging and discharging related functions.

3.1.9

Charging/bi-directional charging session

Includes the process from initialization (stage), energy transfer (stage), to shutdown (stage).

NOTEThe charging/bi-directional chargingsession starts with inserting the charging coupler (all couplers are fully connected) and ends with exiting (all couplers are completely

disconnected), as shown in Figure 9.

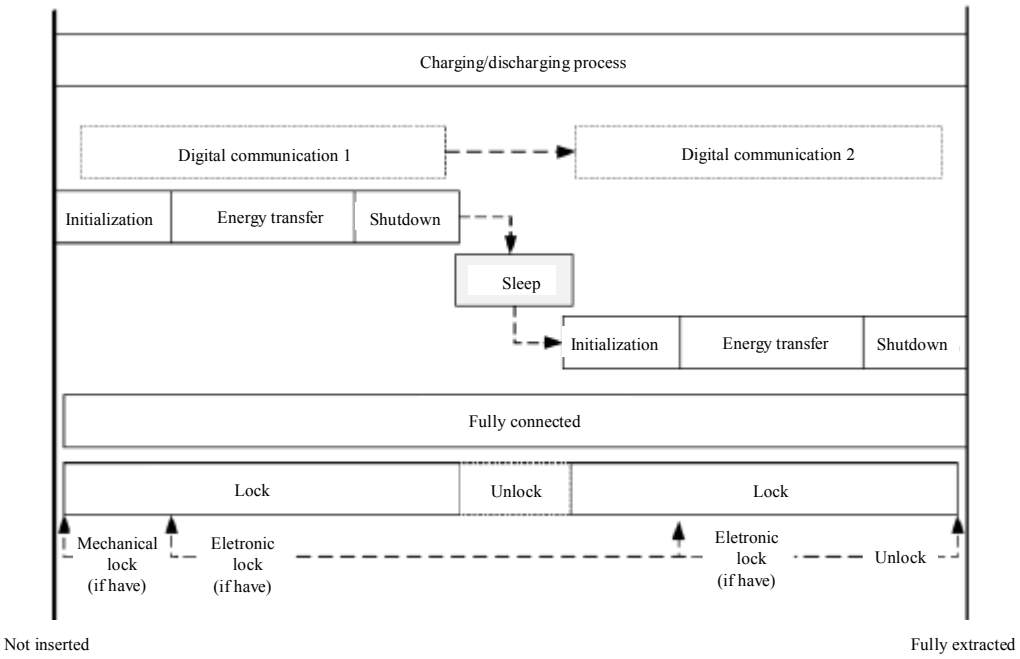

NOTE Digital communication is optional for modes 2 and 3.

Figure 9 - Schematic diagram of charging/bi-directional charging process

3.1.9.1

Initialization (stage)

The time period for setting, checking, and confirming parameters and operating conditions for electric vehicles, power supply equipment, and triggering conditions, in preparation for energy transfer.

Triggering can be initiated by the user, and electric vehicles or power supply equipment that are either dormant or powered off will be awakened or reinitialized.

NOTEIncludes signal connection confirmation, wake-up, readiness, charging reservation, charging system self check, pre charging, etc.

3.1.9.2

Energy transfer (stage)

After completing the initialization (phase), the time period for providing electrical energy to the electric vehicle's rechargeable electrical energy storage system or outputting the electrical energy of the electric vehicle's rechargeable electrical energy storage system to the supply network (power source), load, etc.

NOTE Determine the direction of electrical energy flow based on specific applications.

3.1.9.3

Shutdown (stage)

The time period for executing shutdown.

NOTEIncluding emergency shutdown, error shutdown, and normal shutdown.

3.1.9.3.1

Emergency shutdown

Emergency interruption of energy transfer triggered by errors detected by electric vehicles or power supply equipment.

NOTE May be caused by a power outage in the electric vehicle power supply equipment.

3.1.9.3.2

Error shutdown

The interruption of energy transfer triggered by errors detected by electric vehicles or power supply equipment.

3.1.9.3.3

Normal shutdown

The interruption of energy transfer triggered by the user, electric vehicle, or power supply equipment.

3.1.10

DC power supply circuit

The circuit through which the current flows during the charging or discharging of electric vehicles within the DC power supply equipment, as well as the electrical connection components of all conductive connected vehicle connectors, are used to achieve energy transfer between the DC power supply equipment and the electric vehicle.

3.2 Electric shock, protective measures, isolation, switching, earthing, and bonding

3.2.1

Insulation

The various properties that characterize the ability of an insulator to perform its functions.

NOTE Examples of properties include resistance and breakdown voltage.

[Source: GB/T 2900.1-2008, 3.3.159]

3.2.2

Direct contact

Electrical contact between personnel or animals and live parts.

[Source: GB/T 2900.1-2008, 3.5.68]

3.2.3

Internal use only, not for resale or public post.

Indirect contact

Electrical contact between personnel or animals and exposed conductive parts of live parts under error conditions.

[Source: GB/T 2900.1-2008, 3.5.69]

3.2.4

Basic insulation

Insulation on hazardous live parts that can provide basic protection.

NOTE This concept does not apply to insulation used solely for functional purposes.

[Source: GB/T 2900.1-2008, 3.5.70]

3.2.5

Supplementary insulation

In addition to basic insulation, separate insulation used for additional fault protection.

[Source: GB/T 2900.1-2008, 3.5.71]

3.2.6

Double insulation

Insulation consisting of both basic insulation and supplementary insulation.

[Source: GB/T 2900.1-2008, 3.5.72]

3.2.7

Reinforced insulation

Insulation that the hazardous live parts have electrical shock protectionlevel equivalent to a double insulation.

NOTE Reinforced insulation can consist of several insulation layers that cannot be tested separately like basic insulation or supplementary insulation.

[Source: GB/T 2900.1-2008, 3.5.73]

3.2.8

Asymmetric (insulation) faults

Insulation faults under conditions thtat the resistrances from different charged conductors to protective earthing conductors are different.

3.2.9

Symmetrical (insulation) faults

Insulation faults under conditions that the resistances from all live conductors to the protective earthing conductor are roughly same.

Internal use only, not for resale or public post. www.gbstandards.org

3.2.10

Conductive part

The part that can conduct current.

[Source: GB/T 2900.1-2008, 3.5.5]

3.2.11

Exposed conductive part

The conductive part that can be touched on the equipment, which is not normally live, but will be live when the basic insulation is damaged.

[Source: GB/T 2900.1-2008, 3.5.74]

3.2.12

Live part

Live conductors or conductive partsduring normal operation, including neutral conductors, but traditionally do not include PEN conductors, PEM conductors, and PEL conductors.

NOTE 1: This concept does not necessarily imply a risk of electric shock.

NOTE 2: PEN conductor (protective earthing neutral conductor) is a conductor that has fuctions of both protective earthing conductor and neutral conductor.

NOTE 3: PEM conductor (protective earthing medium conductor) is a conductor that has fuctions of both protective earthing conductor and medium conductor.

NOTE 4: PEL conductor (protective earthingline conductor) is a conductor that has has fuctions of both protective earthing conductor and line conductor.

[Source: GB/T 2900.1-2008, 3.5.34, modified]

3.2.13

Hazardous live part

Live parts that can cause harmful electrical shocks under certain conditions.

[Source: GB/T 2900.1-2008, 3.5.93]

3.2.14

Protective conductor (identification: PE)

Conductor for safety purpose, such as set in the electric shock protection.

NOTE Protective conductors include protective connecting conductors, protective earthing conductors, and earthing conductors used to prevent electric shock.

[Source: GB/T 2900.1-2008, 3.5.24, modified]

Internal use only, not for resale or public post.

3.2.15

Protective bonding conductor

Protective conductor used to protect equipotential bonding.

[Source: GB/T 2900.1-2008, 3.5.25]

3.2.16

Protective earthing conductor

Protective conductor used for earthing protection.

[Source: GB/T 2900.1-2008, 3.5.26]

3.2.17

Earthing terminal

A terminal that can provide reliable electrical connection between the equipment and the earth.

3.2.18

Galvanic separation

A protective measure to prevent conductivity between two circuits intended for energy and/or signal exchange.

3.2.19

Protectiveearthing

For electrical safety purpose, one or more points earthing on the system/facility/equipment.

3.2.20

Residual current device; RCD

A mechanical switch or combination device that can connect, carry, and disconnect current during normal operation, and can disconnect contacts when the residual current reaches the specified value under specified conditions.

3.2.21

Surge protective device; SPD

Electrical device used to limit transient overvoltage and discharge surge currents.

NOTE 1: The surge protective device shall include at least one non-linear component.

NOTE 2: SPD has appropriate connection devices and is a fully assembled part.

[Source: GB/T 18802-11-2020, 3.1.2]

3.2.22

Internal use only, not for resale or public post.

Threshold of perception

The minimum value of contact current that can cause any perception through the human body.

[Source: GB/T 13870.1-2008,3.1]

3.2.23

Threshold of reaction

The minimum value of contact current that can cause involuntary muscle contraction.

[Source: GB/T 13870.1-2008,3.2.2]

3.3 Function

3.3.1

Control pilot circuit

CircuitDesigned for signal transmission or communication between electric vehicles and power supply equipment.

NOTE For Mode 2, the control pilot circuit is the circuit for signal transmission or communication between the electric vehicle and the in-cable control and protection device.

3.3.2

Control pilot function; CP

The function used to monitor the interaction between electric vehicles and power supply equipment.

3.3.3

Connection confirm function; CC

The function of reflecting the states of the vehicle connector connected to the vehicle and/or the EV plug connected to the power supply equipment through electric or mechanical means.

3.3.4

Energy transfer controller

The entity responsible for control pilot functions and/or generating PWM signals (for modes 2 and 3), as well as communication functions, in electric vehicles and power supply equipment.

NOTEIncluding the device energy transfer controller (hereinafter referred to as the "device controller") and the vehicle energy transfer controller (hereinafter referred to as the "vehicle controller"). The energy transfer controller function can be integrated into other components within electric vehicles and power supply equipment, or can be designed as an independent component.

3.4 Electric vehicle

Internal use only, not for resale or public post.

3.4.1

Battery Electric Vehicle; BEV

A vehicle that is driven entirely by electricity and is driven by an electric motor. The driving energy of the motor comes from the on-boardrechargeable electrical energy storage system or other energy storage devices.

[Source: GB/T 19596-2017, 3.1.1.1]

3.4.2

Off-vehicle-chargeable hybrid electric vehicle; OVC-HEV

A hybrid electric vehicle that can obtain electrical energy from non on-board devices under normal use.

Plug-in hybrid electric vehicles (PHEVs) belong to this type.

[Source: GB/T 19596-2017, 3.1.1.2.2.1]

3.4.3

Fuel cell hybrid electric vehicle; FCHEV

Electric vehicles that use fuel cell systems and rechargeable electrical energy storage systems as hybrid power sources.

[Source: GB/T 19596-2017, 3.1.1.3.1]

3.4.4

Rechargeable electrical energy storage system; REESS

A rechargeable electrical energy storage system that can provide electrical energy.

NOTE: The batteries, (electric vehicle) power batteries, and battery packs used in this document belong to rechargeable electrical energy storage systems.

[Source: GB 18384-2020,3.1, with modifications]

3.4.5

EV disconnection device

A specialized device used to cut off energy transfer or have similar functions on the vehicle power supply circuit of the vehicle inlet and rechargeable electrical energy storage system.

NOTE 1: During the charging/bi-directional charging session, the electric vehicle controls the disconnection device state based on the charging/discharging timing determined between it and the power supply equipment.

NOTE 2: Corresponding to C5 and C6 in this document.

3.4.6

Internal use only, not for resale or public post.

Vehicle power supply circuit

The Class Bl voltage circuit between the vehicle inlet (case B connection or case C connection) or connector (case A connection) or the automatic conector coupler permanently connected to the electric vehicle and the rechargeable electrical energy storage system.

NOTERefer to 3.1.3.2.19 of GB/T 19596-2017 for the definition of Class B voltage circuit.

3.4.7

EV simulator

Simulate electric vehicle equipment for testing power supply equipment.

NOTE Electric vehicle simulators can be composed of vehicle inlets, test loads, and additional signal and communication components/circuits, or can be designed as specific systems.

3.4.8

Test load

A device for simulating electric vehicle power batteries under specific testing conditions.

NOTE The test load is configured according to different test items.

3.5 Cords, cables and connection means

3.5.1

Cable assembly

Flexible cables equipped with additional assemblies (standard plugs or EV plugs and/or vehicle connectors), used to connect electric vehicles and supply networks/electric vehicle power supply equipment (fixed on the vehicle for case A connection, connected between the electric vehicle and EV socket-outlet for case B connection,, or fixed on the power supply equipmentfor case C connection).

NOTECable assembly are detachable or part of electric vehicles/power supply equipment.

3.5.2

Cable management system

One or more devices for storing and protecting cable assembly from physical damage and/or for ease of operation.

NOTE For example, cable suspension devices.

3.5.3

Cord extension set

Cable assembly equipped with non removable plugs and matching non removable portable sockets or plugs, as well as flexible cables or wires.

Internal use only, not for resale or public post.

NOTE1: The vehicle adaptor containing cables specified in GB/T 20234.4 is not a cord extension set.

NOTE 2: The cable assembly for Mode 1, Mode 2, and Mode 3 are not cord extension set.

3.5.4

In-cable control and protection device; IC-CPI

A group of parts or components for connecting electric vehicle in Mode 2.

NOTEIncluding circuits, cables, standard plugs, and vehicle connectors that implement control and safety functions, as well as executing control and safety functions.

3.5.5

Standard plug/socket-outlet

Plug and socket-outlet that meet standard requirements and interchangeability, but do not include connection devices for conductive charging of electric vehicles as defined in GB/T 20234 (all parts).

NOTEPlug/socket-outle compling with GB/T 1002 or GB/T 1003 and GB/T 2099.1, or GB/T 11918.1 or NB/T 10202, is standard plug/socket.

3.5.6

EV plug and socket-outlet

Devices that can connect electric vehicles to power supply equipment through cables.

NOTEConsisting of a EV plug and EV socket-outlet.

3.5.6.1

EV plug

The movable part of the EV plug and socket-outletthat connected to the power supply equipment with charging cable. Corresponding to the EV plug in GB/T 20234.2-2015.

3.5.6.2

EV socket-outlet

The part of the EV plug and socket-outlet that is installed on the power supply equipment. Corresponding to the EV socket-outlet in GB/T 20234.2-2015.

3.5.7

Vehicle coupler

Devices that can connect cables to electric vehicles.

NOTEConsisting of vehicle connector andvehicle inlet.

3.5.7.1

Vehicle connector

Internal use only, not for resale or public post.

The movable part of the vehicle coupler that is connected to the charging cable.

3.5.7.2

Vehicle inlet

The part of the vehicle coupler that is fixed on the electric vehicle and connected to the on-board charger or on-board power battery through cables.

3.5.8

Vehicle adaptor

The assembly unit used for connecting interface conversion between vehicle connectors and vehicle inlets that meet different coupler standards, can be composed of control pilot circuits, detection circuits, additional functions, etc., and it is not allowed to switch from one mode to another.

NOTE: Without causing confusion, vehicle adaptors not specified in this document refer to those suitable for connecting vehicle connectors of GB/T 20234.3-2023 andvehicle inlets of GB/T 20234.4.

3.5.9

Connecting point

The location where the electric vehicle is connected to the power supply equipment. The connecting point can be a part of the fixed power supply equipment.

NOTE 1: For Mode 1 and Mode 2, the connecting point refers to the location where the electric vehicle is connected to a fixed device or supply network.

NOTE 2: For modes 3 and 4, the connecting point refers to the location where the electric vehicle is connected to the power supply equipment, which is the EV socket-outlet (case A connection and case B connection) or the vehicle connector (case C connection).

3.5.10

Automatic connector coupler

A device that automatically realizes the electrical and physical connection between power supply equipment and electric vehicles.

NOTEIncluding ACD and ACD counterppart.

[Source: GB/T 40425.1-2021,3.3, modified]

3.5.10.1

Automated connection device; ACD

The part of the automatic conector coupler that achieves the electrical and physical connection between the power supply equipment and the electric vehicle through active mechanical action.

Internal use only, not for resale or public post.

NOTEAbbreviated as ACD.

[Source: GB/T 40425.1-2021,3.4, modified]

3.5.10.2

ACD counterpart

The part of the automatic conector coupler that passively realizes the electrical and physical connection between the power supply equipment and the electric vehicle.

NOTEAbbreviated as ACD counterpart.

[Source: GB/T 40425.1-2021, 3.5, with modifications]

3.5.11

Locking device

A device that keeps the charging coupler in its normal connection position to prevent accidental or unintentional disconnection of the charging coupler. It can also have the function of preventing the charging coupler terminal from being charged before normal insertion and connection, preventing the charging coupler terminal from disconnecting when charged, or making the charging coupler terminal not charged before being pulled out.

[Source: GB/T 20234.1-2023,3.11, with modifications]

3.5.11.1

Mechanical lock

A locking device that locks or unlocks through manually control.

3.5.11.2

Electronic lock

A locking device that locks or unlocks through electrical control.

3.6 Service and usage

3.6.1

Indoor use

Equipment specifically designed for use in areas with climate protection.

3.6.2

Outdoor use

Equipment that can be used in areas without climate protection.

3.6.3

Clearance

Internal use only, not for resale or public post.

The shortest distance between two conductors in air.

[Source: GB/T 16935.1-2008,3.2]

3.6.4

Creepage distance

The shortest distance along the surface of solid insulation material between two conductive components.

[Source: GB/T 16935.1-2008,3.3]

3.6.5

Equipment for locations with restricted access

Equipment used for locations where can only be entered by authorized personnel.

NOTE For example, equipment located in private residences, private parking lots, or similar locations.

3.6.6

Equipment for locations with non-restricted access

Equipment that can be used by all personnel.

NOTE For example, equipment located in public areas.

3.6.7

Portable equipment

Equipment, cable assembly, or other accessories connected by wires and plugs, which can be carried by individuals and transported within vehicles.

3.6.8

Mobile equipment

Electrical equipment that can be moved during operation or easily moved from one location to another when connected to a power source.

[Source: GB/T 2900.71-2008826-16-04]

3.6.9

Fixed equipment

Equipment that is firmly connected to a support or installed in a designated location.

[Source: GB/T 2900.71-2008826-16-07]

3.6.10

(Electrically) skilled person

Person with corresponding education and experience who can detect and avoid hazards caused by electricity.

Internal use only, not for resale or public post. www.gbstandards.org

[Source: GB/T 2900.71-2008826-18-01]

3.6.11

(Electrically) instucted person

Person who are fully guided and supervised by skilled person and can detect and avoid hazards caused by electricity.

[Source: GB/T 2900.71-2008826-18-02]

3.6.12

Ordinary person

Person neither skilled person nor instructed person.

[Source: GB/T 2900.71-2008826-18-03]

3.6.13

User

Person who use and/or benefit from equipment, system, or service.

[Source: GB/T 2900.102-20200871-02-05, modified]

3.7 Current and voltage regulation

3.7.1

Applicable maximum current

The upper limit of the current used in the energy transfer stage, which can be dynamically adjusted throughout the entire energy transfer process.

NOTEIn the energy transfer stage, the applicable maximum current can be adjusted through digital communication, as shown in 5.2.1.6.

3.7.2

Present measured current

The result of measuring the instantaneous physical value of the present current under specified measurement conditions.

NOTE 1: For DC power supply equipment, the present measured current is the present measured charging current or the present measured discharging current.

NOTE 2: This value is the instantaneous value of the current obtained by an ideal measuring device in a single sampling without any filtering or measurement tolerances/errors.

3.7.3

Present measured voltage

The result of measuring the instantaneous physical value of the present voltage under

Internal use only, not for resale or public post.

specified measurement conditions.

NOTE 1: For DC power supply equipment, the present measured voltage is thepresent measured charging voltage or the present measured discharging voltage.

NOTE 2: This value is the instantaneous voltage obtained by an ideal measuring device in a single sampling without any filtering or measurement tolerances/errors.

3.7.4

Rated current (A side)

The current specified by the manufacturer under normal operating conditions.

NOTE For cable assembly, refer to GB/T 20234 for the definition of rated current .

3.7.5

Rated voltage (A side)

The voltage specified by the manufacturer under normal operating conditions.

3.7.6

Operating voltage range

The voltage range specified by the manufacturer for the power supply equipment to be used under normal operating conditions.

NOTE On side B, for DC powered equipment, the operating voltage range is either the charging voltage range or the discharging voltage range.

3.7.7

Rated continuous current

The maximum current limit specified by the manufacturer for the contimuous operation of DC power supply equipment under normal operating conditions.

NOTE 1: On side B, for DC powered equipment, the rated continuous current is the maximum charging current or maximum discharge current.

NOTE 2: On side B, for DC power supply equipment with constant power charging function, the maximum charging current is the current value corresponding to OP4 in Figure 10; For DC power supply equipment without constant power charging function, the maximum charging current is the current value corresponding to OP3 in Figure 10.

Internal use only, not for resale or public post.

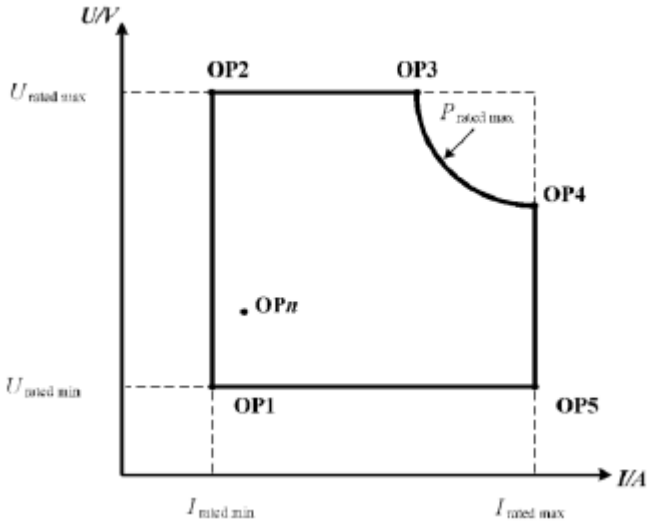

Key

OPn	-Operating point of DC power supply equipment (n=1, 2, ⋯⋯, n)
$I_{rated\ max}$	-Rated continuous current (see 3.7.7);
$U_{rated\ max}$	-Rated maximum voltage (see 3.7.8);
$P_{rated\ max}$	-Rated maximum power (see 3.7.9);
$I_{rated\ min}$	-Rated minimum current (see 3.7.10);
$U_{rated\ min}$	-Rated minimum voltage (see 3.7.11).

Figure 10 - Schematic diagram of working points of DC power supply equipment

3.7.8

Rated maximum voltage

The voltage upper limit specified by the manufacturer for the continuous operation of DC power supply equipment under normal operating conditions.

NOTE On side B, for DC powered equipment, the rated voltage is the highest charging voltage or highest discharge voltage.

3.7.9

Rated maximum power

The maximum power limit specified by the manufacturer for the continuous operation of DC power supply equipment under normal operating conditions.

NOTE 1: On side B, for DC powered equipment, the rated maximum power is the maximum charging power or maximum discharge power.

NOTE 2: On side B, for DC charging equipment with constant power charging function, the maximum charging power is the charging power corresponding to the entire curve from OP3 to OP4 in Figure 10. For DC charging equipment without constant power charging function, the maximum charging power is Pmax corresponding to OP3 in Figure 10.

Internal use only, not for resale or public post.

3.7.10

Rated minimum current

The lower current limit specified by the manufacturer for thecontinuous operation of DC power supply equipment under normal operating conditions.

NOTE On side B, for DC powered equipment, the rated minimum current is the minimum charging current or minimum discharging current.

3.7.11

Rated minimum voltage

The lower voltage limit specified by the manufacturer for the continuous operation of DC power supply equipment under normal operating conditions.

NOTE On side B, for DC powered equipment, the rated minimum voltage is the lowest charging voltage or lowest discharge voltage.

3.7.12

Target current (EV)

The current value requested to the DC power supply equipment, which can be adjusted through digital communication.

NOTE 1: The target current refers to the charging target current or the dischargingtarget current.

NOTE 2: Requests are only initiated by electric vehicles.

3.7.13

Target voltage (EV)

The voltage value requested from the DC power supply equipment can be adjusted through digital communication.

NOTE 1: The target voltage refers to the charging target voltage or the discharge target voltage.

NOTE 2: Requests are only initiated by electric vehicles.

3.8 Pulse heating control

3.8.1

Pulse heating

The method to heat the battery pack of vehicle by connecting electric vehicles to DC charging and discharging equipment and periodically switch between charging and discharging

3.8.2

Maximum discharging pulse current

The maximum discharge current supported by electric vehicles or DC charging and

Internal use only, not for resale or public post.

discharging equipment.

3.8.3

Maximum charging pulse current

The maximum charging current supported by electric vehicles or DC charging and discharging equipment.

3.8.4

Minimum discharging pulse voltage

The minimum discharge voltage of the battery during the discharge process of electric vehicles; The minimum discharge voltage supported by DC charging and discharging equipment.

3.8.5

Maximum charging pulse voltage

The maximum charging voltage of the battery during the charging process of electric vehicles; The maximum charging voltage supported by DC charging and discharging equipment.

3.8.6

Maximum discharging pulse time

The longest pulse discharge time supported by electric vehicles.

3.8.7

Maximum charging pulse time

The longest pulse charging time supported by electric vehicles.

3.8.8

Minimum discharging pulse time

The shortest pulse discharge time supported by electric vehicles.

3.8.9

Minimum charging pulse time

The shortest pulse charging time supported by electric vehicles.

3.8.10

Discharging pulse time

The discharging request time during pulse heating process of electric vehicles.

3.8.11

Charging pulse time

Internal use only, not for resale or public post.

The charging request time during the pulse heating process ofelectric vehicles.

3.8.12

Maximum heating time

The maximum allowable time for pulse heating of electric vehicles.

3.8.13

Discharging pulse limiting voltage

The target voltage for electric vehicle discharge during pulse heating process.

3.8.14

Charging pulse limiting voltage

The charging target voltage during pulse heating process of electric vehicles.

3.8.15

Discharging pulse current amplitude

The discharging target currentduring pulse heating process.

3.8.16

Charging pulse current amplitude

The charing target current during pulse heating processof electric vehicles.

3.9 Other

3.9.1

Supply network

Any one or more power sources.

NOTE For example, power sources or grids, distributed energy (DER), battery packs (including energy storage devices), photovoltaic devices, generators, etc.

3.9.2

Side A

Supply network side

The device is connected to the side of the supply network.

3.9.3

Side B

Electric vehicle side

The device is connected to the side of the electric vehicle.

3.9.4

Internal use only, not for resale or public post.

Digital communication

Exchange of digital coding information.

NOTE GB/T 27930-2023 specifies the information for digital communication exchange between conductive non on-board DC power supply equipment and electric vehicles.

3.9.5

Vehicle to X; V2X

The operating method that the power battery of electric vehicles is connected to the supply network or load through charging and discharging equipment, and serves as an energy storage unit to participate in power supply.

NOTE The supply network or load includes public supply network, building power distribution system, residential power distribution system, electric vehicle power battery, electricity load, etc.

[Source: GB/T 29317-2021, 10.1, modified]

3.9.6

Vehicle to grid; V2G

The operating method that power battery of electric vehicles is connected to the public supply network through charging and discharging equipment, and serves as an energy storage unit to participate in the power supply of the public supply network, achieving bidirectional energy flow.

[Source: GB/T 29317-2021, 10.1.1, modified]

4 Classification

4.1 Input characteristics of supply network

Electric vehicle power supply equipment is classified according to the power supply system it is connected to:

- The electric vehicle power supply equipment is connected to the AC supply network;
- An electric vehicle power supply equipment is connected to the DC supply network.

4.2 Supply network connection method

Electric vehicle power supply equipment is classified according to the connection method of the supply network it is connected to:

- Connect using standard plug cable assembly;
- Fixed connection.

4.3 Type of energy transfer current (B side)

Internal use only, not for resale or public post.

The electric vehicle power supply equipment is classified according to the type of current used for energy transfer on the B side:

- AC power supply equipment;
- DC power supply equipment;
- AC/DC power supply equipment.

4.4 Operating environmental conditions

4.4.1 Normal operating environment

Electric vehicle power supply equipment is classified according to environment of normal opearing:

- Indoor use;
- Outdoor use.

4.4.2 Special operating environment

Can be classified according to the special service conditions specified in 15.2.

4.4.3 Installation and operating location

Classification of electric vehicle power supply equipment is classified according to the installation and operating location:

- For locations with restricted access;
- For locations with non-restricted access.

4.5 Output of power supply equipment

Electric vehicle power supply equipment is classified according to output voltage:

- AC rated voltage: single-phase 220V, three-phase 380V;
- DC rated maximum voltage: 500 V, 750 V, 1000 V, 1250 V;
- DC operating voltage range: 200 V~500 V, 200 V~750 V, 200 V~1000 V *, 500 V~1250 V.

NOTE * is the recommended operating voltage range for DC power supply equipment using Annex C control pilot function.

Electric vehicle power supply equipment is classified according to output current:

- Rated current of parent current: 8 A, 10 A, 16 A, 32 A, 63 A;
- DC rated continuous current: 10A, 20 A, 32 A, 50 A, 80 A, 100 A, 125 A, 160 A, 200 A, 250 A, 315 A, 400 A, 500 A, 630 A, 800 A.

4.6 Installation method

Electric vehicle power supply equipment is classified according to installation

Internal use only, not for resale or public post.

method:

- Stationary type (wall mounted: installed on walls, poles or other equivalent positions, including embedded installation and surface installation; bracket type; floor mounted: installed on the ground);
- Non-stationary type (mobile: such as a movable charging device; portable: such as in-calble control and protection device for Mode 2, and a portable power supply device for Mode 4).

4.7 Electric shock protection

Electric vehicle power supply equipment is classified according to electric shock protection:

- Class I equipment: using basic insulation as the basic protection measure, and using protective bonding as the fault protection measure;
- Class II equipment: using basic insulation as the basic protection measure, and using supplementary insulation as the fault protection measure, or using reinforced insulation that can provide basic protection and fault protection functions.

NOTERefer to GB/T 17045-2020 for the definitions of Class I and Class II.

4.8 Charging mode

Electric vehicle power supply equipment is classified according to the charging mode of 3.1.4:

- Mode 1;
- Mode 2;
- Mode 3;
- Mode 4.

More than one mode can appear in the same power supply device.

5 General requirements for charging systems

5.1 Operating conditions of electric vehicle charging mode

5.1.1 Mode 1

Mode 1 charging system uses standard plugs to connect to standard socket-outlets, and use single-phase AC power supply during energy transfer, and it is not allowed to exceed 8 A and 250 V. IOn the power side, use plugs and sockets that meet the requirements of GB/T 2099.1 and GB/T 1002. Use phase wires, neutral lines, and protective earthing conductors on the power side, and residual current protection devices on the power side. Protective earthing conductors shall be provided from standard

Internal use only, not for resale or public post.

socket-outlets to electric vehicles.

Mode 1 shall not be used to charge electric vehicles.

5.1.2 Mode 2

Mode 2 charging system uses standard plugs to connect to standard socket-outlets, and use single-phase AC power supply during energy transfer. When using a 10 A standard plug/socket-outlet that meets the requirements of GB/T 2099.1 and GB/T 1002 or NB/T 10202 on the power side, the output shall not exceed 8 A; When using standard plugs/socket-outlet that meet the requirements of GB/T 11918.1 and GB/T 11918.2 on the power side, the output shall not exceed 32 A. Single phase two pole plugs/socket-outletspecified in GB/T 1002 shall not be used on the power supply side. On the power supply side, shall use standard socket-outlets with correct installation including phase, neutral, and protective earthing conductors, and usein-cable control and protection devices (IC-CPD) to connect the supply network (power supply) to the electric vehicle. Includes plugs that integrate additional functions such as temperature detection, residual current protection, and switches, and the remaining parts meet the requirements of the above standards, and comply with relevant standard testing requirements.

From standard socket-outlets to electric vehicles, protective earthing conductors shall be provided, as well as residual current protection and overcurrent protection functions.

The AC charging control pilot function of Mode 2 shall comply with the provisions of Annex A.

5.1.3 Mode 3

Mode 3 applies to the situation where the power supply equipment permanently connected to the AC supply network connects the electric vehicle to the AC supply network, and a specialized protective device is installed on the electric vehicle power supply equipment.

When the electric vehicle power supply equipment has one or more mode 3 connecting points (EV socket-outlet) that can be used simultaneously, each connecting point shall have a specialized protective device and ensure that the control pilot function can operate independently.

Mode 3 shall have residual current protection function.

Case A connection, case B connection, and case C connection are applicable to mode 3.

When using single-phase power supply, the current does not exceed 32 A. When using three-phase power supply and the current is greater than 32 A, case C connection shall be used.

NOTECase D connection and E applicable to Mode 3 are currently under consideration.

The AC charging control pilot function of Mode 3 shall comply with the provisions of Annex A.

Internal use only, not for resale or public post. www.gbstandards.org

5.1.4 Mode 4

Mode 4 applies to the situation where the electric vehicles is connected to DC power supply equipment, and to devices permanently connected to the supply network or connected to the supply network through standard plug cable assembly or through AC vehicle inlets.

The power supply equipment that uses standard plug cable assembly or AC vehicle inlets to connect to the AC supply network shall comply with the provisions of NB/T 10902.

Mode 4 (including V2G) can be directly connected to AC or DC supply networks.

Case C connection, case D connection, and case E connection are applicable to mode 4.

Only case C connection is applicable to V2G.

The DC charging control pilot function of Mode 4 shall comply with the provisions of Annex B or Annex C.

5.2 Functions provided by modes 2, 3, and 4

5.2.1 Functional requirements for mode 2, mode 3, and mode 4

5.2.1.1 General rules

The power supply equipment shall provide at least the following control pilot functions:

- Continuous monitoring of the continuity of the protective earthing conductor;
- Confirmation of correct connection between electric vehicles and power supply equipment;
- Power supply control function;
- Power supply equipment power-off control function;
- Allowed applicable maxmimu current;
- Electric vehicle charging wake-up function.

When the power supply equipment is capable of transferring energy to multiple electric vehicles simultaneously, it shall be ensured that the above control pilot functions can operate independently and normally at each connecting point.

5.2.1.2 Continuous monitoring of the continuity of protective earthing conductors

When charging in modes 2, 3, and 4, the electrical continuity of the protective earthing conductor shall be continuously monitored by the power supply equipment.

NOTE The above does not apply to Class II equipment.

For Mode 2, monitoring is conducted between the electric vehicle and in-cable

Internal use only, not for resale or public post.

control and protection device.

For modes 3 and 4, monitoring is conducted between the electric vehicle and the power supply equipment.

If the loss of electrical continuity of the protective earthing conductor is detected in the energy transfer stage, the power supply equipment shall cut off the power supply circuit and comply with the corresponding provisions of A.3.10.6, B.4.7.5, and C.7.13.3.

5.2.1.3 Confirmation of correct connection between electric vehicles and power supply equipment

The power supply equipment shall be able to confirm that the vehicle connector or EV plug is correctly inserted into the vehicle inlet or EV socket-outlet.

5.2.1.4 Power supply control function

Only when the control pilot function between the power supply equipment and the electric vehicle establishes a correct relationship with the state signal of allowing power-on, can the power supply equipment transfer energy to the electric vehicle. However, it shall not automatically enter the discharge mode. Only when it directly or indirectly receives the command of allowing discharge from the supply network and the electric vehicle discharge condition is established, can the electric vehicle discharge to the supply network through the charging and discharging equipment.

5.2.1.5 Power-off control function of power supply equipment

When the control pilot function is interrupted, or the control pilot signal does not allow charging/discharging, or a discharge power-off command is received, or other conditions that do not allow energy transfer are detected, the power supply equipment shall cut off the energy transfer between the electric vehicle, but its control pilot circuit can remain energized.

NOTE Power-off may also be caused by other reasons, such as power outages.

5.2.1.6 Allowed applicable maximum current

The power supply equipment shall be able to inform the electric vehicle of the allowed applicable maximum current value through PWM (Mode 2 and Mode 3) or digital communication (Mode 4). The value shall not exceed any of the following values:

- Rated operating current of power supply equipment;
- Rated current of cable assembly;
- Allowed maximum discharging current (dynamic variation) of the vehicle's power battery (applicable to mode 4, V2G).

NOTE The cable assembly include the cable assembly used for charging in modes 2 and 3, except for case B connection.

Power supply equipment can adjust its present applicable maximum current value due to application requirements (such as power restrictions of supply network, etc.), but shall

Internal use only, not for resale or public post.

not exceed its allowed applicable maximum current value.

If the actual output current is detected to be higher than the current applicable maximum current value in the energy transfer stage, the power supply equipment shall cut off the power supply circuit and comply with the relevant provisions in A.3.10.9, A.3.10.10, C.7.6.4, and NB/T 33001-2018.

5.2.1.7 Charging wake-up function of electric vehicle

In modes 2 and 3, after the charging connection device is fully connected, the dormant electric vehicle shall have the function of being awakened by the AC power supply device. The wake-up function achieved through PWM signal complies with the provisions of timing 3.1 in Table A.7.

For the DC charging system in Mode 4 using Annex B control pilot function, when the auxiliary power supply circuit or communication interaction begins, the dormant electric vehicle shall be able to be awakened and start charging (starting from t3 in Figure B.2).

For the DC charging system with mode 4 and using control pilot function in Annex C, the dormant electric vehicle shall be able to be awakened through detection point 2 or detection point 3, and comply with the provisions of C.4.2.1 and C.4.4.

5.2.2 Optional functions for Mode 2, Mode 3, and Mode 4

5.2.2.1 Real time adjustment of available load current for electric vehicle power supply equipment

Can ensured in some way that the charging current does not exceed the real-time available load current of the power supply equipment and AC or DC supply network.

5.2.2.2 Locking function of charging coupler in Mode 2 and Mode 3

Using locking devices to ensure reliable connection of vehicle connectors and/or EV plugs, avoiding accidental live disconnection between power supply equipment and electric vehicles. When the rated current of power supply equipment and electric vehicles is less than or equal to 16 A AC, this function is optional.

5.2.2.3 Voltage adaptive switching function of vehicle power supply circuit

Electric vehicles can have a voltage adaptive switching function in the vehicle power supply circuit to achieve charging compatibility between electric vehicles of different voltage levels and charging equipment. The entire voltage adaptability switching process will not have a safety impact on the charging equipment and charging process.

NOTE Annex D provides a method for implementing adaptive switching of vehicle power supply circuit voltage for DC charging systems using Annex B control pilot function. Refer to GB/T 27930-2023 for the corresponding updated requiremetns of vehicle charging parameters.

5.2.2.4 V2G DC charging and discharging function

Electric vehicles can discharge to the supply network through charging and

Internal use only, not for resale or public post.

discharging equipment, but other additional conditions need to be met to achieve this.

NOTESee Annex E for the implementation of V2G DC charging and discharging function.

6 Communication

In Mode 4, digital communication shall be used to achieve data exchange between electric vehicles and power supply equipment, and the communication protocol shall comply with the provisions of GB/T 27930-2023.

Digital communication is optional for modes 2 and 3. Digital communication in modes 2 and 3 can be used for equipmentfor locations with restricted access, while digital communication requirements for equipmentfor locations with non-restricted access are under consideration.

7 Electric shock protection

7.1 General requirements

7.1.1 General rules

Electric shock is defined as the physiological effect that occurs when an electric current flows through humans or livestock. Physiological effects may be harmful (such as ventricular fibrillation, burns, and asphyxia); Or it can be harmless (such as muscle reactions and perception).

Shall realize electric shock protection measures under single fault conditions.

Under expected use and reasonably foreseeable misservice conditions, at least one of the following measures shall be taken to prevent electric shock hazards and potential injuries to the output circuit of power supply equipment.

- Basic protection (see 7.2);
- Fault protection (see 7.3);
- Supplementary measures (see 7.5).

Basic protection is used for protection under normal operating conditions, while fault protection is used for protection under single fault conditions.

7.1.2 Expected use and reasonably foreseeable misuse

Expected use and reasonably foreseeable misuse shall meet:

- Hazardous live parts shall not be accessible, and accessible conductive parts shall not be dangerous live; and
- There shall be no dangerous current when the charging coupler is disconnected.

7.1.3 Limit values of contact current or contact voltage

Under normal operating conditions and single fault conditions, one of the following

Internal use only, not for resale or public post.

measures shall be taken to avoid dangerous electric shocks to ordinary person:

- Limiting contact current and contact energy; or
- Limit contact voltage.

Under normal operating conditions and single fault conditions, the corresponding human impedance shall also be combined with the water wetting conditions specified in 3.1.8 of GB/T 13870.1-2022.

NOTE Do not consider people who sweat or skin soaked in seawater.

7.1.4 Perception threshold and startle response

During the expected use process and reasonably foreseeable misuse, protective measures shall be taken to avoid startle reactions before, during, and after energy transfer under normal operating conditions and single fault conditions. Under normal operating conditions, there may be perceptual reactions.

NOTE 1: The curve a (boundary between ACl/AC2 and DCl/DC2) in Tables 11 and 13 of GB/T 13870.1-2008 corresponds to the startle response threshold in this document.

NOTE 2: The expected usage includes but is not limited to handheld energy transfer components, such as charging cables, EV plug/vehicle connectors and EV socket-outlet/vehicle inlets, cable detection, pre charging, energy transfer termination, ordinary person or animals entering or leaving electric vehicles, opening and retrieving items from vehicle trunk/luggage compartment or other storage spaces, touching the chassis of electric vehicles, and touching the exposed metal parts of power supply equipment.

For the current path, it shall be from finger to foot at the charging coupler and from hand to foot at the chassis.

A protective measure shall be provided to limit the contact current, such that the steady-state contact current between accessible conductive components shall not exceed

- 0.5 mA AC/2 mA DC under normal operating conditions;
- 3.5 mA AC/10 mA DC under single fault conditions.

When the contact current of Class I equipment exceeds 3.5 mA (effective value), the contact current requirement shall comply with the provisions of 12.1.2.

For DC charging, additional protection shall be provided so that in the event of both basic protection and fault protection of the DC power supply circuit failing simultaneously, the steady-state contact current shall not exceed the DC2 limit (line b) specified in Figure 22 and Table 13 of GB/T 13870.1-2022.

The power supply equipment shall be able to limit the discharge energy, so that the discharge current/discharge energy shall not exceed:

- 5 μJ, under normal operating conditions,;
- 0.5 mj, under a single fault condition,.

Internal use only, not for resale or public post.

NOTE 3: This value is derived from 5.2.7 b of GB/T 17045-2020.

For cable assembly, additional protection shallbe provided so that in the event of both basic protection and cable assembly fault protection failing simultaneously, the steady-state contact current shall not exceed the C1 limit values in Figure 20 of GB/T 13870.1-2022 and Figure 20 of GB/T 13870.2-2016, respectively.

The following parameters shall be used:

- the impedance of the human body is 575 Ω according to GB/T 13870.1-2022,;
- he maximum Y-capacitance of electric vehicles, according to ISO 17409:2010;
- The critical point of asymmetric/symmetric insulation resistance value in the energy transfer stage is 100 Ω/V.

7.2 Basic protection

7.2.1 General rules

Basic protection measures are taken for power supply equipment to prevent ordinary person from contacting with live parts. One or more measures specified in 7.2.2, 7.2.3, 7.2.4, and 7.2.5 shall be taken.

7.2.2 Basic insulation protection for live parts

The live parts of the power supply equipment shall be protected by basic insulation and shall comply with the provisions of 4.4.3.2 in IEC 62477-1: 2016.

Basic insulation shall be protected through solid insulation or reasonably designed electrical clearances and/or creepage distances.

Any accessible conductive part that is not insulated as required to separate the live part is considered a hazardous live part.

The design and testing of basic insulation shall be able to withstand the pulse voltage and temporary overvoltage of the circuit it is connected to.

The test shall be conducted in accordance with 5.2.3.2 and 5.2.3.4 of IEC 62477-1:2016.

7.2.3 Protection with casing or barrier

The power supply equipment shall be protected by a casing or barrier, and shall comply with the provisions of 4.4.3.3 in IEC 62477-1:2016.

The casing shall be suitable for use in its intended environment.

The power supply equipment shall have sufficient mechanical strength, and its structure shall ensure that it is not in danger of expected use or misuse within its expected lifespan.

The casing shall be opened or the barrier removed:

- By using tools or keys;

Internal use only, not for resale or public post. www.gbstandards.org

- After powering off the hazardous live parts.

7.2.4 Limiting voltage protection

Use voltage limiting for basic protection shall meet the following conditions.

a) During normal operation, the steady-state contact voltage shall not exceed the limit values specified in Table 1.

b) Under a single fault condition, the steady-state contact voltage shall not exceed the limit values specified in Table 2.

c) During normal operation, the non recurring DC contact voltage shall not exceed the limit values specified in Table 1.

d) Under a single fault condition, the non recurring DC contact voltage from fingertips to feet shall not exceed the limit value specified in Figure 11;

e) This voltage is provided by one of the following sources:

   1) Safety isolation transformer for auxiliary circuits (including control pilot);

   2) Voltage source providing the same safety level as the safety isolation transformer;

   3) Electrochemistry (such as batteries).

Table 1 - Contact voltage under normal operation

Human contact area	AC (effective value)	DC
Body parts	Basic protection	
Hand		
Fingertip	12 V	30 V
NOTE These values are based on the current path from the body's contact area to the feet while standing.		

Table 2 –Contact voltage under single fault conditions

Human contact area	AC (effective value)	DC
Body parts	Fault protection	
Hand		
Fingertip	30 V	60 V
NOTE 1: These values are based on the current path from the body's contact area to the feet when a person is standing. NOTE 2: If these values cannot be met under a single fault condition, protective isolation is required.		

Internal use only, not for resale or public post.

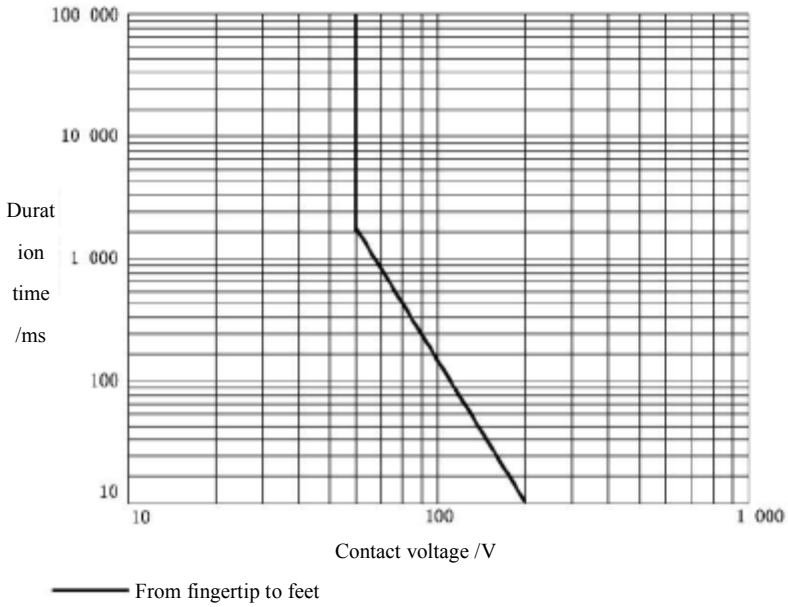

Figure 11 - Contact time - DC voltage under single fault conditions (water wetted, from fingertips to feet)

7.2.5 Limit protection of steady-state contact current

Provide steady-state contact current limits, limiting the contact current to non hazardous values. The limit value is according to 7.1.4.

The protective impedance for limiting contact current shall comply with the provisions of 4.4.5.4 in IEC 62477-1:2016.

The design and testing of protective impedance shall be able to withstand the pulse voltage and temporary overvoltage tests specified in 5.2.3.2 and 5.2.3.4 of IEC 62477-1:2016.

7.3 Fault protection

Fault protection can prevent personal injury caused by touching hazardous energy during and after the failure of basic protection, and should comply with the provisions of 5.3 in GB/T 17045-2020.

The fix installed power supply equipment, protective earthing conductors, and protective connection conductors in modes 3 and 4 shall be connected fixed.

7.4 Protective earthing conductor

For all modes, a protective earthing conductor shall be provided between the earthing terminal of the AC supply network, the earthing terminal of the DC supply network, and the earthing terminal of the vehicle connector.

The protective earthing conductor shall comply with the provisions of GB/T 16895.3.

For electric vehicle power supply equipment in modes 3 and 4 that are permanently

Internal use only, not for resale or public post.

connected to the supply network, switches or similar devices shall not be used to connect protective earthing conductors.

For electric vehicles and power supply equipment with mode 4 and using Annex B control pilot function, if a fuse (or similar device with overcurrent and short circuit protection characteristics) is not installed in the vehicle connector, the minimum cross-sectional area of the protective conductor shall not be less than 16 mm^2.

NOTE When configuring a fuse (or similar device with overcurrent and short-circuit protection characteristics), the protective conductor can be selected by matching with the fuse.

For electric vehicles and power supply equipment in Mode 4 using control pilot function in Annex C, the minimum cross-sectional area of the protective conductor shall not be less than 6 mm^2.

7.5 Supplementary measures

To prevent electric shock caused by the failure of basic protection and/or fault protection, or by the user's carelessness, additional protection shall be provided, such as configuring residual current protectors according to 11.3, configuring insulation monitoring devices (IMDs) according to Annex B and Annex C.

Additional protective measures can be configured with necessary assembl according to the system category.

7.6 Direct contact protection

The protection level for accessible dangerous parts shall meet the following requirements:

a) For all modes and connection methods, the protection level of the casing shall be at least IPXXC;

b) For all modes, case B connection or case C connection, when the vehicle connector is coupled with the vehicle inlet, the vehicle connector and the vehicle inlet: IPXXD;

c) For Mode 3, case A connection or case B connection, when the EV plug is coupled with the EV socket-outlet, the EV plug and EV socket-outlet: IPXXD;

d) For Mode 2 and Mode 3, case B connection or case C connection, when the vehicle connector and vehicle inlet are not coupled, the vehicle connector and vehicle inlet: IPXXB:

e) For Mode 3, case A connection or case B connection, when the EV plug and EV socket-outlet are not coupled, the EV plug and EV socket-outlet: IPXXB;

f) For Mode 4, case C connection, when the vehicle connector and vehicle inletcomplying with GB/T 20234.3-2023are not coupled, effective measures shall be taken to prevent human contact with the conductive parts of the DC charging pin and sleeve;

Internal use only, not for resale or public post.

g) For Mode 4, case C connection, when the vehicle connector and vehicle inletcomplying with GB/T 20234.4are not coupled, the vehicle connector and vehicle inlet are IPXXB.

7.7 Energy storage

7.7.1 Standard plug disconnection

Within 1 second after the standard plug is disconnected from the standard socket-outlet, the voltage between any accessible parts of the standard plug shall be less than or equal to 60 V DC, or less than or equal to 30 V AC (effective value), or equivalent stored energy less than or equal to 0.2 J.

7.7.2 Vehicle coupler disconnection

When the vehicle inlet is disconnected from the vehicle connector, the vehicle inlet shall comply with the provisions of 5.1.3.5 in GB 18384-2020.

Within 1 second after the vehicle connector is disconnected from the vehicle inlet, the voltage between any accessible parts of the vehicle connector shall be less than or equal to 60 V DC, or less than or equal to 30 V AC (effective value), or equivalent stored energy less than or equal to 0.2 J.

7.7.3 Disconnection of EV plug and socket-outlet for mode 3 case B connection

When the EV socket-outlet and EV plug are disconnected, the EV plug shall comply with the provisions of 5.1.3.5 in GB 18384-2020.

Within 1 second after the EV plug is disconnected from the EV socket-outlet, the voltage between any accessible parts of the EV socket-outlet shall be less than or equal to 60 VDC, or less than or equal to 30 V AC (effective value), or equivalent stored energy less than or equal to 0.2 J.

7.7.4 Supply network outage

Within 1 second after a power outage in the supply network, the voltage measured between the power lines of the output terminals of the power supply equipment or between the power lines and the protective earthing conductor shall be less than or equal to 60 V DC, or less than or equal to 30 V AC (effective value), or equivalent stored energy less than or equal to 0.2 J.

7.8 Safety requirements for signal circuits between electric vehicle power supply equipment and electric vehicles

Any signal circuit between power supply equipment and electric vehicles shall provideprotection measures in accordance with 7.3.

7.9 Contactor adhesion

In Mode 4, electric vehicles shall have monitoring and alarm function of charging circuit vehicle disconnect device (C5 and C6) adhesion. When a vehicle disconnect device adhesion fault is detected, electric vehicles shallnot be allowed to start charging.

Internal use only, not for resale or public post. www.gbstandards.org

In modes 3 and 4, the power supply equipment shall have monitoring and alarm function of contactor (or similar device) adhesion on the power supply circuit before starting charging. When a contactor adhesion fault is detected, the AC power supply equipment shallnot output PWM, and the DC power supply equipment shall stop the self check process.

8 Connection between electric vehicles and electric vehicle energy transfer

8.1 General requirements

Clause 8 specifies the requirements for physical conductive electrical coupler between electric vehicles and power supply equipment. The content of Clause 8 applies to charging a single vehicle connector with an electric vehicle. For charging multiple vehicle connectors with the same electric vehicle, it shall be determined through separate consultation between the user and the manufacturer.

When the power supply equipment is connected to multiple electric vehicles at the same time, there shall be a design mechanism to ensure that each electric vehicle's corresponding electrical power supply circuit maintains galvanic seperation at any time. The DC power supply equipment with multiple charging couplers shall comply with the provisions of Annex F.

8.2 Neutral line

In the AC charging system of electric vehicles, the AC supply network shall have a neutral line and case A connection shall be connected to a standard socket-outlet.

In case B and case C connection, the neutral line shall be connected to the vehicle connector.

8.3 Contact sequence

The contact sequence for connection or disconnection shall comply with the provisions of 6.3.1.3 in GB/T 20234.1-2023.

8.4 Functional description of EV plug and socket-outlet and vehicle coupler in mode 1 and mode 2

The standard plug/socket-outlet used for connecting Mode 1 and Mode 2 to the supply network (power supply) shall comply with the requirements of GB/T 1002, GB/T 1003, GB/T 2099.1, GB/T 11918.1, or NB/T 10202. The vehicle connector/inlet connected to electric vehicles shall comply with the requirements of GB/T 20234.2-2015.

8.5 Functional description of Mode 3 EV plug and socket-outlet and vehicle coupler

Mode 3 EV plug and socket-outlet and vehicle coupler shall comply with the requirements of GB/T 20234.2-2015.

Internal use only, not for resale or public post.

When using single-phase power supply, the conductors of the AC supply network (power supply) shall be connected between phase 1 (L1) and neutral (N), and L2 and L3 can be left blank or not connected. When using three-phase power supply, the conductors of the AC supply network (power supply) shall be connected between phase 1 (L1), phase 2 (L2), phase 3 (L3), and neutral (N).

8.6 Functional description of Mode 4 vehicle coupler

Mode 4 vehicle coupler is only used to provide DC power and shall comply with Requirements of GB/T 20234.3-2023 or GB/T 20234.4-2023.

The parameters of each DC vehicle coupler described in GB/T 20234.3-2023 shall only be used for the charging system specified in Annex B.

The parameters of each DC vehicle coupler described in GB/T 20234.4-2023 shall only be used for the charging system specified in Annex C.

9 Vehicle adaptor

For Mode 4, a vehicle adaptor can be used to connect the vehicle connector and vehicle inlet. The vehicle adaptor shall comply with the provisions of Annex D in GB/T 20234.4-2023, and the corresponding control pilot circuit shall comply with the provisions of Annex G. The vehicle adaptor shall clearly indicate the conditions under which the electric vehicle manufacturer or operator allows.

NOTE Other specialized vehicle adaptors are shown in Annex H.

10 Special requirements for vehicle coupler and EV plug and socket-outlet

10.1 General

For applications with a rated continuous current greater than 16 A, temperature monitoring devices shall be installed on EV socket-outlets, vehicle inlets, and Mode 4 vehicle connectors. Power supply equipment and electric vehicles shall have coupler temperature monitoring and over temperature protection functions, and meet the relevant requirements of GB/T 20234 standard.

For electric vehicle power supply equipment with mode 4 and control pilot function, in Annex C,the thermal management of its cable assembly shall also meet the provisions of C.7.9.

NOTE When installing a temperature monitoring device on Mode 2 standard plug end, there may be patent issues involved.

10.2 Cord extension set

Except for cable assembly, cord extension set shall not be used to connect electric

Internal use only, not for resale or public post.

vehicles and power supply equipment.

10.3 Breaking capacity

The breaking capacity of the vehicle coupler and EV plug and socket-outlet shall comply with the provisions of 6.3.11 and 7.22 in GB/T 20234.1-2023.

Specific methods can be used for connectors or systems with locking devices to avoid disconnection on load. If necessary, this function can be integrated into the self-locking device.

For mode 4, the vehicle coupler shall not be disconnected on load. When disconnected under DC load due to a fault, there shall be no dangerous situation.

10.4 IP protection grade

The IP protection grade of the charging connection device shall comply with the provisions of 6.3.10 and 7.21 in GB/T 20234.1-2023.

10.5 Insertion and extraction force

The force required to connect and disconnect vehicle connectors and sockets shall comply with the provisions of 6.3.6 and 7.17 in GB/T 20234.1-2023. The force required to connect and disconnect EV plugs and EV socket-outlet shall comply with the provisions of 6.3.6 and 7.17 in GB/T 20234.1-2023.

10.6 Locking device

10.6.1 Locking devices for charging couplers in modes 2 and mode 3

When the maximum charging current of the AC power supply equipment and on-board charger is greater than 16 A, the EV plug and socket-outlet and vehicle coupler shall have a locking device, which shall comply with the provisions of I.1 in Annex I and 6.3.4 in GB/T 20234.1-2023. EV socket-outlet and vehicle inlet shall be equipped with electronic locks to prevent accidental disconnection during energy transfer. For AC power supply equipment using mode 3 case B connection, when the electronic lock of the EV socket-outlet is not expected to lock or is not reliably locked, charging shall be stopped or not started.

10.6.2 Locking device for charging coupler in mode 4

During DC charging, the vehicle coupler shall have a locking device. When it is detected that the locking device of the vehicle coupler is not reliably locked before insulation self check, the DC power supply equipment shall stop insulation self check or be notified by the electric vehicle to stop insulation self check, and charging shall not be allowed. From the beginning of insulation self check to the end of energy transfer, DC power supply equipment or electric vehicles shall keep the electronic lock in a locked state. After the energy transfer is completed and the vehicle coupler voltage drops below 60 V DC, the electronic lock can be unlocked.

a) For the vehicle coupler in GB/T 20234.3-2023, the locking device shall comply with the provisions of 1.2 and 6.3.4 in GB/T 20234.1-2023. The vehicle

Internal use only, not for resale or public post.

connector end shall be equipped with a mechanical lock, and the DC power supply equipment shall be able to determine whether the mechanical lock is reliably locked. The vehicle connectorshall be equipped with an electronic lock. When the electronic lock is in the locked position, the mechanical lockshall not be able to operate. The DC power supply equipmentshallbe able to determine whether the electronic lock is reliably locked. When the mechanical lock or electronic lock is not reliably locked, the DC power supply equipment shall stop charging or not start charging. From the self check stage to the end of energy transfer, when the DC power supply equipment detects that the electronic lock is not expected to lock or is not reliably locked, it shall comply with the requirements of B.4.7.9.

b) For the vehicle coupler in GB/T 20234.4-2023, the locking device shallcomply with the provisions of 1.2 and 8.3 in GB/T 20234.4-2023. Vehicle inlets shall be equipped with electronic locks. After confirming that the vehicle coupler is fully connected, the electric vehicle will activate the electronic lock to reliably lock and inform the DC power supply equipment of the locking information. From the self check stage to the end of energy transfer, when the electric vehicle detects that the electronic lock is not expected to lock or is not reliably locked, it shall comply with the requirements of C.7.13.3.

If an emergency unlocking device is used, anti misoperation measures shallbe taken. For mode 4, emergency unlocking devices shall not be used during energy transfer. When the current voltage at the vehicle coupler is less than or equal to 60V DC, the emergency unlocking device is allowed to be used.

10.7 Impulse current

10.7.1 Impulse current in modes 2 and 3

In modes 2 and 3, the AC power supply equipment shall be able to withstand surge currents and meet the following requirements:

- The AC power supply equipment shallbe able to withstand a peak of 230 A for a period of 100 μs after closing the contactor to output the rated voltage value;
- Within the next 1 second, the AC power supply equipment shall be able to withstand a current of 30 A (effective value).

NOTE The waveform and settings of the impulse current are shown in Figure 29 and 9.8.2.1 of GB/T 41589-2022.

It is also possible to verify the independent switch equipment of AC power supply equipment in accordance with the provisions of GB/T 7251.7.

The protection device selected for AC power supply equipment shallnot trip due to surge current.

10.7.2 Impulse current in mode 4

In Mode 4, the peak surge current (peak) from the electric vehicle to the DC power

Internal use only, not for resale or public post.

supply equipment or from the DC power supply equipment to the electric vehicle when the DC contactor is connected shall be controlled below 20 A DC.

11 Structural requirements for electric vehicle energy transfer equipment

11.1 General

AC charging should use case C connection, while DC charging shall use case C connection.

The structural design of AC power supply equipment for mode 3 case B connectionshall meet the installation requirements of EV socket-outlets specified in Annex B of GB/T 20234.2-2015. The accessories used for the AC power supply equipment of case C connection in mode 2 and mode 3 shall comply with the provisions of Annex A in GB/T 20234.2-2015. The accessories used for the DC power supply equipment of case C connectionin mode 4 shall comply with the provisions of Annex A in GB/T 20234.3-2023 or Annex A in GB/T 20234.4-2023.

The electric vehicle power supply equipment shall meet the requirements under normal service conditions in 15.1, and the assembly should comply with the relevant requirements of GB/T 7251.1-2013 and the power supply equipment manufacturer.

For use in extreme environments or other conditions, see 15.2.

11.2 Characteristics of mechanical switch equipment

11.2.1 Switch and isolation switch

The switch and isolation switch shall comply with the relevant requirements of GB/T 14048.3, and their usage category shall not be lower than AC-22A or DC-21A specified in GB/T 14048.3.

11.2.2 Contactor

Contactor shall comply with the relevant requirements of GB/T 14048.4, and their usage category shall not be lower than AC-1 or DC-1 specified in GB/T 14048.4.

11.2.3 Circuit breaker

Circuit breakershall comply with the relevant requirements of GB/T 10963.1, GB/T 14048.2, or GB/T 16917.1, and have overload and short circuit protection functions.

11.2.4 Relay

The relay shall comply with the relevant requirements of GB/T 21711.1-2008.

11.3 Residual current protection

11.3.1 Residual current protectors for AC power supply equipment

The residual current protection of AC power supply equipment shall have the

Internal use only, not for resale or public post.

function of protecting AC residual current, pulsating DC residual current, and smooth DC residual current of 6 mA and above, and comply with the relevant residual current action characteristics requirements of GB/T 14048.2, GB/T 16916.1 and GB/T 22794, or GB/T 16917.1 and GB/T 22794. The residual DC detection device for electric vehicle charging used in Mode 3 shall comply with GB/T 40820-2021.

When the AC power supply equipment is equipped with EV socket-outlet (Mode 3 case B connection) or a vehicle connector (Mode 2 or Mode 3 case C connection) that complies with GB/T 20234.2-2015, it shall have one of the following protective measures:

- Type A residual current protection unit with smooth DC residual current protection of 6 mA or more, or
- Type A residual current protector is used in conjunction with a device for monitoring and protecting smooth DC residual current of 6 mA or more, or
- Type B residual current protector, whose configuration condition is that the current power supply circuit configuration is not lower than the Type B residual current protector or not installing residual current protectors.

The rated residual operating current of the residual current protector, $I_{\Delta n}$, shall not exceed 30 mA.

NOTE Smooth DC residual current also includes the DC residual current generated by the rectification circuit of two-phase/three-phase power supply.

11.3.2 Residual current protectors for DC power supply equipment

The AC side main circuit and control power AC circuit of DC power supply equipment shall have residual current protection function (see protection measures specified in 11.3.1) or have one of the following strengthened electrical protection measures:

- Double insulation;
- Reinforced insulation;
- Isolation;
- Basic insulation and reliable earthing of accessible conductive components.

Isolation can be achieved by installing fences outside the equipment or installing isolation nets inside.

If the supply network side of the DC power supply equipment does not have residual current protection function, its control power AC circuit shall have residual current protectors (AC type residual current protectors can be used), and the rated residual operating current of the residual current protectors, $I_{\Delta n}$, shall not exceed 30 mA.

For DC power supply equipment with a rated maximum power of less than 20 kW, if an RCD that meets the requirements of 11.3.1 has been installed on the input side of the supply network, the control power supply may not be configured with an RCD.

Internal use only, not for resale or public post.

When the control power supply loses power due to the residual current protection action of the previous stage or other reasons, the DC power supply equipment shall be able to disconnect the DC power supply circuit.

11.4 Electrical clearances and creepage distances

When the power supply equipment is installed by the manufacturer, its electrical clearance and creepage distance shall at least meet the provisions of GB/T 16935.1-2008.

Power supply equipment components (power supply part) directly connected to the AC supply network: minimum overvoltage type IV.

Power supply equipment components (power supply part) directly connected to the DC supply network: minimum overvoltage type II.

Power supply equipment permanently connected to the AC supply network: minimum overvoltage category III, but for EV socket-outlets or vehicle connectors with case C connection: minimum overvoltage category II.

Power supply equipment connected to the supply network through standard plug cable assembly or vehicle inlets: minimum overvoltage category II.

NOTERefer to GB/T 16935.1-2008 for the definition of overvoltage category.

Refer to provisions of 4.3.3.6 in GB/T 16935.1-2008 when the equipment is used under conditions of higher overvoltage categories.

11.5 IP protection level

11.5.1 Protection level for mode 2

The protection level of the in-cable control and protection device (IC-CPD) in Mode 2 shall comply with the provisions of GB/T 41589.

11.5.2 Protection level for Mode 3 and Mode 4

In modes 3 and 4, the protection level of the power supply equipment shall not be lower than IP32 (indoors) or IP54 (outdoors).

11.6 Cable management and storage methods

For the power supply equipment connected to method C, a storage method shall be provided for unused vehicle connectors.

For case C connection, the vehicle connector shall be stored 0.5 to 1.5 meters above the ground.

For case C connection power supply equipment with cables exceeding 7.5 meters in length, relevant management and storage measures shall be taken to ensure that the length of cables that can be freely moved when not in use does not exceed 7.5 meters.

When designing storage measures, shall ensure that cables or cable assembly stored or partially placed in storage locations avoid the influence of thermal radiation sources.

Internal use only, not for resale or public post. www.gbstandards.org

11.7 Surge protective device (SPD)

11.7.1 Service scenarios

Manufacturers of DC power supply equipment with mode 4 case C connection should select surge protective devices (SPD) according to the on-site environment and installation conditions, as shown in Figure 12, and comply with the provisions of 11.7.2 and 11.7.3.

NOTE Scenarios for configuring SPD include but are not limited to using long DC cable assembly (>10 meters) and cable assembly near lightning protection systems (LPS).

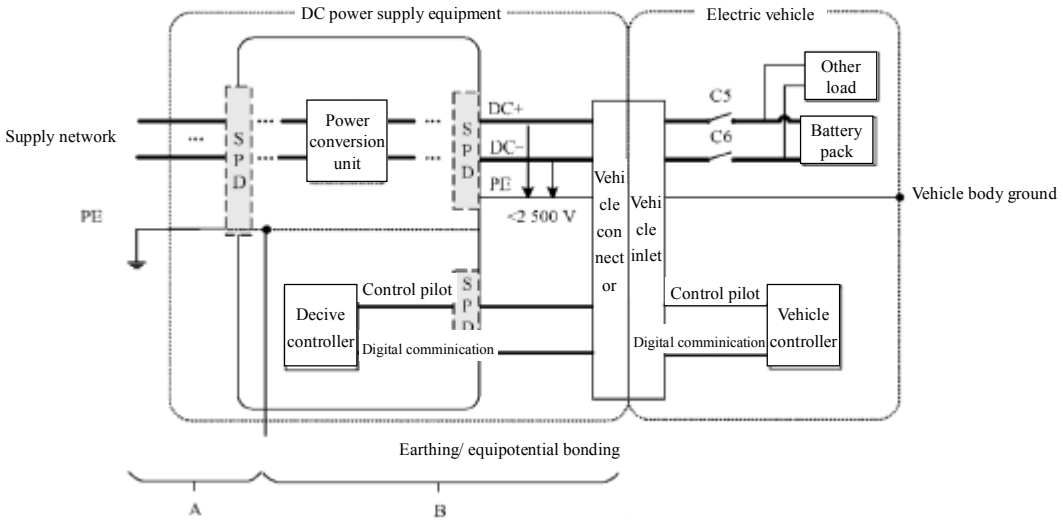

a) Integrated DC power supply equipment

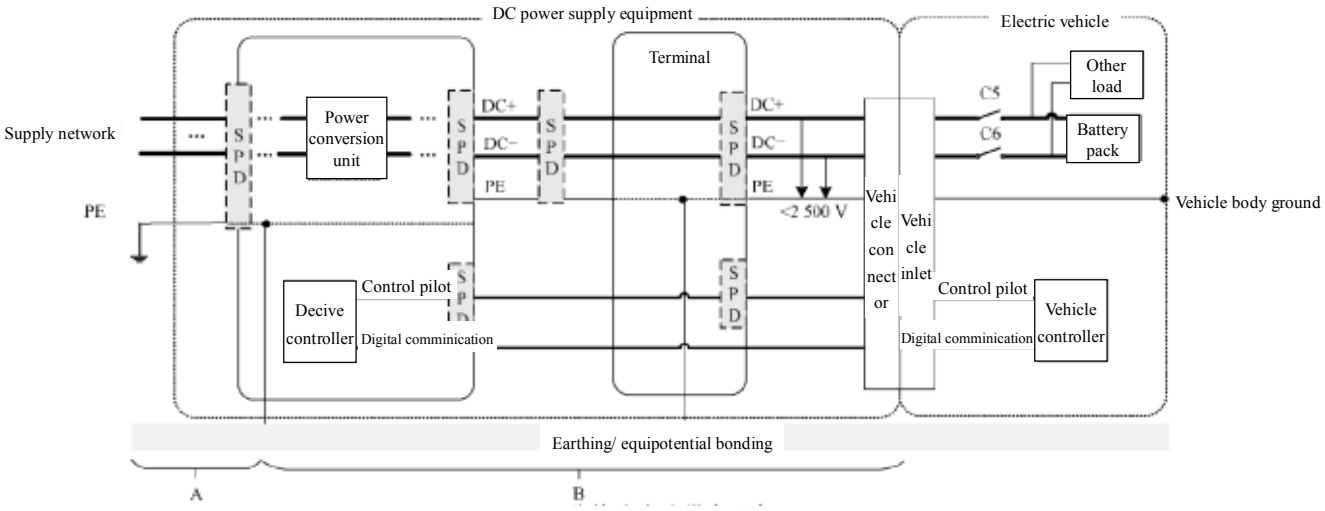

b) Split type DC power supply equipment

Key

DC+ - Positive of DC power supply circuit;

DC- - Negative of DC power supply circuit;

C1, C2 - Internal DC power supply circuit contactor of power supply equipment;

C5, C6 - Internal vehicle disconnection device for electric vehicles;

A - Applicable to the transient part through AC power supply, see 11.7.2;

B - Applicable to transient phenomena through DC cable assembly, see 11.7.3.

The dashed box in the figure is for illustration only, and the actual configuration can be determined based on the on-site environment and installation conditions.

Figure 12 - Example of SPD installation setting

11.7.2 Input transient overvoltage

According to the test requirements specified in Annex E of GB/T 18487.2-2017, standard lightning wave short-term impulse voltage shall be applied on the supply network side of DC power supply equipment according to Table 3. DC power supply equipment shall limit its output voltage to not exceed:

- 2500 V for the voltage between DC+ and PE;
- 2500 V for the Voltage between DC- and PE;
- DC charging voltage+500 V for the voltage between DC+ and DC-.

During the test, the DC power supply equipment shall operate at the rated maximum voltage.

According to the provisions of 4.3.3.6 in GB/T 16935.1-2008, appropriate reduction of overvoltage can be achieved through a combination of one or more attenuation methods.

NOTESee GB/T 16935.1-2008 for the definition of overvoltage category.

11.7.3 Preventing transient overvoltage caused by atmospheric sources or switches

Any power or data cable connected to a DC power supply device shall be protected from lightning or switching events by taking appropriate measures, such as

- installing SPD inside the DC power supply device;
- Installing SPD on the supply network side of DC power supply equipment;
- Configuring protection for the surrounding environment of continuous power supply equipment.

The function and installation of SPD selected for DC power supply equipment shall meet the requirements of GB/T 16895.22, and relevant information shall be included in the installation manual.

SPD shall comply with:

- GB/T 18802-11, applicable to AC power cables, if any;
- GB/T 18802-21, applicable to data cables, if any;
- IEC 61643-41, applicable to DC and is under consideration, if any.

Surge protection components such as metal oxide varistors (MOV), gas discharge tubes (GDTs), and thyristor surge suppression (TSS) can be placed inside DC power supply equipment. If these components are part of SPD, SPD shall be tested according to

Internal use only, not for resale or public post. www.gbstandards.org

the GB/T 18802 series standards.

For DC power supply equipment with a rated output voltage of 1000V DC, relevant protection shall be provided for the charging connection device, such as by selecting SPD with the following protection levels:

- Voltage between DC+ and PE: 2500 V;
- Voltage between DC- and PE: 2500 V.

The installation manual of DC power supply equipment shall include relevant information such as SPD installation to prevent transient overvoltage at the vehicle coupler.

12 Performance requirements for electric vehicle energy transfer equipment

12.1 Contact current

12.1.1 Limit value of contact current

The AC (effective value) and DC contact current shall not exceed the values specified in Table 3.

Table 3 – Limit value of contact current

Contact position	Normal operating condiction	Fault condition[a]	
		Class I equipment	Class II equipment
Between any testing network end [b]and the accessible metal parts connected to each other, as well as between the metal foil covering the insulating external material	0.5 mA AC/ 2 mA DC	3.5 mA AC/ 10 mA DC	0.25 mA AC/ 10 mA DC
Between any testing network end [b]and typically non active metal inaccessible parts (double insulation)		Not applicable	3.5 mA AC/ 10 mA DC
Between the inaccessible and accessible parts connected to each other and the metal foil intended to be covered on the insulating external material (supplementary insulation)		Not applicable	0.5 mA AC/ 10 mA DC
[a]Refers to the fault conditions specified in 6.2.2 of GB/T 12113-2003. [b] See GB/T 12113-2003.			

12.1.2 Special situations that limit value of contact current exceeds 3.5 mA

In the event of a fault condition where the protective earthing conductor connected to the AC supply network is disconnected, if the contact current of Class I equipment exceeds 3.5mA (effective value), shall use isolation measures such as fences to prevent ordinary person from contacting with hazardous live parts, or adopting effective and

Internal use only, not for resale or public post.

reliable permanent earthing methods, such as selecting a larger cross-sectional protective earthing conductor, adding one protective earthing conductor, etc.

12.1.3 Selection of test network

The contact current shall be tested in accordance with 5.4.1 of GB/T 12113-2003, and one of the measurement networks specified in Figures 3, 4, and 5 of GB/T 12113-2003 shall be used.

For AC contact currents less than or equal to 2 mA (effective value), the measurement network specified in Figure 4 of GB/T 12113-2003 should be used; For AC contact currents greater than 2 mA (effective value), the measurement network specified in Figure 5 of GB/T 12113-2003 shall be used.

The DC contact current shall be measured using any of the measurement networks in Figures 3, 4, and 5 of GB/T 12113-2003.

The measurement terminal A in the measurement network is sequentially connected to each conductive or non earthing touchable surface. For each round of testing of measuring terminal A electrode, the measuring terminal B electrode is first earthed and then sequentially touched with other accessible components. All accessible conductive or non earthing surfaces shall be subject to contact current testing.

NOTE Refer to GB/T 12113-2003 for measuring terminals A and B.

For accessible non-conductive components, test a metal box with a size of 100mm X 200mm covering the contact surface of the component.

12.1.4 Test conditions

The following circuits can be disconnected before the test:

- Circuit connected to the protective conductor through a fixed resistor;
- Circuit with earthing continuity as the monitoring zero;
- Circuit that protects conductors from generating current during normal operation of power supply equipment.

The test shall be conducted at the rated output power of the power supply equipment.

After completing GB/T 2423.3 Constant Damp Heat Test Ca [Test temperature: (40 ± 2) ℃, relative humidity: (93 ± 3)%, duration: 4 d], conduct contact current measurement within 1 hour. The power supply equipment shall be connected to the AC supply network in accordance with Clause 6 of GB/T 12113-2003. The test voltage shall be 1.1 times the rated voltage.

According to the provisions of 6.2.2 in GB/T 12113-2003, conduct tests under each applicable fault condition.

12.2 Insulation resistance

Apply a 500V DC voltage for 1 minute between the non electrically connected live

Internal use only, not for resale or public post.

circuits of the power supply equipment and between each independent live circuit and the earth (casing), and the insulation resistance shall not be less than 10 MΩ.

During the test, all ELV circuits shall be connected to easily accessible components. The insulation resistance test shall be conducted with the protection impedance disconnected.

Before the test, perform the following operations.

a) Short circuit the input terminals and output terminals of the charging device.

b) Printed circuit boards and multi connector components can be unplugged, disconnected, or replaced with standard samples during testing. If the insulation damage of auxiliary devices (such as auxiliary transformers, pulse transformers, measuring devices, etc.) may cause voltage to reach the easily accessible parts of the human body that are not connected to the casing, or the high voltage side potential to reach the low voltage side, and cause fault tripping, the connection between the auxiliary device and the main circuit shall not be disconnected, but shall withstand the same test voltage as the main circuit.

After completing GB/T 2423.4 Alternating Damp Heat Test Db (Test temperature: 40 ℃, number of cycles: 2), conduct insulation resistance retesting within 30 minutes, and the insulation resistance shall meet the following requirements:

- Class 1 device: R>1 MΩ;
- Class II devices: R>7 MΩ.

12.3 Dielectric strength

Apply a 1-minute power frequency AC voltage (or DC voltage can also be used) according to Table 4 between the non electrically connected live circuits of the power supply equipment and between each independent live circuit and the earth (metal casing). The dielectric strength test under different protective measures can refer to IEC 62477-1:2016, and shall not be lower than the requirements in Table 4.

Table 4 - Dielectric Strength Test

Rated insulation voltage Ui (Line to Line AC or DC) V	Dielectric strength test voltage[a] (AC Effective value) V	Dielectric strength test voltage[a] (DC) V
$U_i \leq 60$	1 000	1 415
$60 < U_i \leq 300$	1 500	2 120
$300 < U_i \leq 690$	1 890	2 670
$690 < U_i \leq 800$	2 000	2 830
$800 < U_i \leq 1000$	2 200	3 110

1 000< U_i≤ 1 500[b]	—	3 820
[a] During the outgoing test, the dielectric strength test allows the test voltage to be 10% higher than the specified value in the table, and the test time is 1 second. [b] Only refers to DC.		

During the testing process, all electrical equipment shall be connected and the power consuming devices in the power supply equipment that consume the test voltage and cause current flow shall be disconnected, such as windings, measuring instruments, surge protective devices (SPD).

NOTERefer to GB/T 17627 for the selection of testing voltage errors and testing equipment.

During the test, the leakage current value shall not exceed 10 mA, and there shall be no insulation breakdown or flashover phenomenon at the test location.

12.4 Impulse withstand voltage

Apply a short-term impulse voltage of three positive and three negative standard lightning waves (with a gap of not less than 5 seconds each time, a pulse waveform of 1.2/50 μs, and a power impedance of 500 Ω) between the non electrically connected live circuits of the power supply equipment, and between each independent live circuit and the earth (metal casing) according to Table 5:

- Power supply equipment components (power supply part) directly connected to the AC supply network: minimum overvoltage category IV;
- Electric vehicle power supply equipment permanently connected to the AC supply network: minimum overvoltage category III, but for EV socket-outlets or vehicle connectors of case C connection: minimum overvoltage category II;
- Electric vehicle power supply equipment connected to the supply network through standard plug cable assembly or vehicle inlets: minimum overvoltage category II.

The impact withstand voltage test under different protective measures is shown in IEC 62477-1:2016, and shall not be lower than the requirements in Table 5.

Table 5 -Test voltage of impulse withstand

System nominal voltage V	test voltage of impulse withstand V
≤50 V (effective value)or71 V DC	500
100 V(effective value)or141 V DC	800
150 V (effective value)or 213 V I)C	1 500
300 V (effective value)or424 V DC	2 500

600 V (effective value)or 849 V DC	4 000
1 000 V (effective value)or 1 500 V DC	6 000
—	Allow interpolation

During the testing process, all electrical equipment shall be connected and power consuming devices (such as windings and measuring instruments) that consume the test voltage and cause current flow in the power supply equipment shall be disconnected.

During the test, there shall be no breakdown discharge at the test location.

12.5 Temperature requirements

12.5.1 General

When verifying according to the relevant requirements of GB/T 7251.1-2013, the power supply equipment and its circuits shall be able to continuously withstand the rated continuous current under specific conditions (see 5.3.1 and 5.3.2 of GB/T 7251.1-2013). The temperature rise limit shall comply with the provisions of 9.2 in GB/T 7251.1-2013. For components without relevant standards, the temperature rise limit shall comply with the provisions of 12.5.2.

12.5.2 Extreme temperature rise

The electric vehicle power supply equipment shall operate continuously under rated load for a long time, and the temperature rise of all internal heating components and parts shall not exceed the provisions of relevant equipment standards such as NB/T 33001-2018 and NB/T 33002-2018.

12.5.3 Permissible surface temperature

Under the condition of maximum charging current and ambient temperature of 40 ℃, the maximum allowable temperature of the accessible surface by the hand grip is:

- 50 ℃for metal part;
- 60 ℃for non-metallic parts.
- The maximum temperature and high temperature warning signs on the surface of the cable is shown in 6.2.13 of GB/T 20234.1-2023.

Under the same conditions, the maximum allowable temperature for surfaces that users may touch but cannot grip is:

- 60 ℃ for metal part;
- 85 ℃for non-metallic parts.

Electric vehicle power supply equipment shall be designed as:

- The accessible part shall not exceed a specific temperature;

Internal use only, not for resale or public post.

- The component, part, insulator, and plastic material not exceeding the temperature that may reduce electrical, mechanical, or other performance during normal use within the service life of the facility.

12.6 Lightning protection

The installation and selection of surge protective devices (SPD) shall be based on the installation location of the power supply equipment and meet the requirements of 6.4 in GB 50057-2010 when connected to the AC supply network. When lightning protection measures shall be taken for power supply equipment, it shall meet the relevant requirements of 11.7.

13 Overload protection and short circuit protection

13.1 General

The overcurrent protection device shall comply with the provisions of GB/T 14048.2, GB/T 14048.9, and GB/T 16917.1, as well as the relevant provisions of GB/T 10963 (all parts) and GB/T 13539C (all parts).

If the AC power supply equipment has one or more connecting points (EV socket-outlets under case B connection or vehicle connectors under case C connection), these connecting points can have common overload protection devices and short circuit protection devices. These protective devices provide the necessary protection for each connecting point (for example, the rated value of public protection devices shall not exceed the minimum rated value in the connecting point).

If the AC power supply equipment has multiple connecting points that cannot be used simultaneously (EV socket-outlets under case B connection or vehicle connectors under case C connection), these connecting points can have common protective devices.

13.2 Overload protection of charging cables

Electric vehicle power supply equipment shall provide overload protection for cables of various sizes under case C connection, unless corresponding protection has been provided on the input side. Overload protection can be achieved by circuit breakers, fuses, or other combinations.

If overload protection is achieved by methods other than circuit breakers, fuses, or other combinations, this method shall disconnect the charging within 1 minute when the charging current exceeds 1.3 times the rated current of the cable.

13.3 Short circuit protection of charging cables

Electric vehicle power supply equipment shall provide short-circuit current protection for cables, unless corresponding short-circuit protection has been provided on the input side.

When a short circuit occurs, the I^2t value of the EV socket-outlet of the power supply equipment in Mode 3 (case A connection and case Bconnection) shall not exceed 75000

Internal use only, not for resale or public post.

A^2s.

When a short circuit occurs, the I^2t value of the vehicle connector of the power supply equipment in mode 3 (case C connection) shall not exceed 80000 A^2s.

When a short circuit occurs, the I^2t value of the vehicle connector of power supply equipment in mode 4 shall not exceed 500000 A_2s.

NOTE: In Mode 4, the I^2t value is achieved through the combination of a power conversion unit and a fuse (or similar device with overcurrent and short circuit protection characteristics).

14 Emergency shutdown

Emergency shutdown devices should be installed on power supply equipment. When the emergency shutdown device is activated, the power supply equipment shall cut off its electrical connection with the electric vehicle (DCoutput or AC output) to prevent further electric shock, fire, or explosion.

The recovery of emergency shutdown caused by power supply equipment failures shall be conducted by skilled person or instructed person after confirming fault eliminating and safety.

15 Service conditions

15.1 Normal service conditions

15.1.1 Ambient air temperature

The power supply equipment shall at least meet the following normal operating temperature ranges:

- Outdoors: 25 ℃~+40 ℃;
- Indoors: -5 ℃ to+40 ℃.

NOTE See 1.52 for service conditions of special temperature.

15.1.2 Humidity conditions

15.1.2.1 Humidity conditions for indoors equipment

At a maximum temperature of+40 ℃, its relative humidity does not exceed 50%. A relatively high relative humidity is allowed at lower temperatures, such as+20 ℃ being 90%. Should consider the possibility of occasional moderate condensation due to temperature changes.

15.1.2.2 Humidity conditions for outdoors equipment

When the maximum temperature is+25 ℃, the relative humidity can reach up to 100% in a short period of time.

15.1.3 Pollution level

Internal use only, not for resale or public post.

Pollution level refers to the macroscopic environmental conditions in which the power supply equipment is located, the classification can refer to direct contact protection in 7.6, creepage distance in 11.4, and classification in 4.4.

- Outdoors: Pollution level 3;
- Indoors: Pollution level 2;
- Indoors industrial environment exposed to pollution: Pollution level 3.

Under normal service conditions, when outdoor use meets any of the following conditions, it can be designed according to pollution level 2:

a) The protection level of electric vehicle power supply equipment is IP55 or above;

b) Except for short-term and occasional pollution caused by foreseeable condensation, only non-conductive pollution occurs.

15.1.4 Altitude

This document applies to the installation of electric vehicle power supply equipment with an altitude not exceeding 2000 meters.

The electrical clearance and creepage distance of electric vehicle power supply equipment with an altitude exceeding 2000 meters shall comply with the requirements of GB/T 16935.1-2008.

NOTE For power supply equipment used at high altitudes, it is necessary to consider the decrease in dielectric strength, the switching ability of the equipment, and the cooling effect of the air.

15.2 Special service conditions

If there are special service conditions specified by the customer, a special agreement regarding testing shallbe reached between the power supply equipment manufacturer and the customer.

Special service conditions include, but are not limited to:

a) Values different from the temperature, relative humidity, and/or altitude specified in 15.1;

b) Application scenarios where the speed of temperature and/or air pressure changes causes abnormal compression inside the power supply equipment of electric vehicles;

c) Heavy air pollution caused by dust, smoke, corrosive substances or radioactive particles, steam or smoke;

d) Exposed to strong electric or magnetic fields;

e) Exposed to extreme weather conditions;

f) Corrosion by fungi or microorganisms;

Internal use only, not for resale or public post.

g) Areas with fire or explosion hazards;

h) Exposed to heavy vibrations, impacts, earthquakes;

i) The installation environment where the current carrying capacity or disconnection capacity is affected, such as the power supply equipment being located in the machine or embedded in the wall;

j) Exposed to electromagnetic interference different from those specified in GB/T 18487.2-2017;

k) Abnormal overvoltage environment or voltage fluctuations;

l) Excessive harmonics of power supply voltage or load current.

Under the following special conditions, additional functions shall be added for the power supply equipment:

a) The power supply equipment is located in areas with combustible gases or vapors, fuels, or other flammable or explosive substances;

b) The power supply equipment is designed and installed at an altitude of over 2000 meters;

c) The power supply equipment is designed and installed in areas with special humid, hot, and corrosive environments.

Additional functions can be determined through consultation with the manufacturer.

15.3 Special conditions during transportation and storage

If there are different or additional conditions during transportation and storage, the manufacturer shall declar.

16 Maintenance

The design of power supply equipment shall facilitate maintenance and repair of the equipment.

17 Identification and Description

The power supply equipment shall be at least with clear marking of the following contents:

- Company name, abbreviation, trademark, or unique identifier that can identify the manufacturer;
- Product name and model;
- Serial number, production batch number, or equipment number;
- Production date;

Internal use only, not for resale or public post. www.gbstandards.org

- AC/DC rated voltage (V);
- AC/DC rated current (A).

NOTE The AC/DC rated voltage and rated current here refer to the supply network side (A side).

For DC power supply equipment, at least the following content shall also be marked:

- Maximum charging/discharging power (kW);
- Charging/discharging voltage range (V);
- Maximum charging/discharging current (A).

If there is a multi-channel energy transfer, the maximum charging/discharging power and maximum charging/dischargingcurrent of each channel shall be marked.

Internal use only, not for resale or public post. www.gbstandards.org

Annex A
(normative)
Control pilot circuit and control principle of AC charging

A.1 Control pilot circuit

A.1.1 Mode 3

When electric vehicle uses Mode 3 for charging, the control pilot circuit shown in Figure A.1 (Case A connection), Figure A.2 (Case B connection), and Figure A.3 (Case C connection) shall be used to confirm the connection of the charging connection device and determine the rated current parameters. The vehicle controller can be integrated into the on-board charger or other on-board control units. The parameters of the control pilot circuit are shown in Table A.1. When the vehicle coupler (for case B and case C connection) and/or EV plug and socket-outlet (for case A connection and case B connection) are fully connected, S2 closes when the vehicle completes self check and is in an allowed charging state (if the vehicle is equipped with a "charging request" or "charging control" function, it shall also meet the requirement that the vehicle is in a "charging request" or "rechargeable" state). Switch S3 is linked to the press-down button on the vehicle connector (used to trigger the mechanical locking device). When the button is pressed to release the mechanical locking function, S3 is in a disconnected state.Switch S2 can also be omitted from the control pilot circuit. Vehicles without switch S2 shall use single-phase charging, and the maximum charging current not exceeding 8 A. The functional and control logic analysis in this Annex is based on the control pilot circuit equipped with switch S2. For the control pilot circuit not equipped switch S2, it is equivalent to switch S2 being in a normally closed state.

NOTE For user safety reasons, it is not recommended to use control pilot circuits without S2.

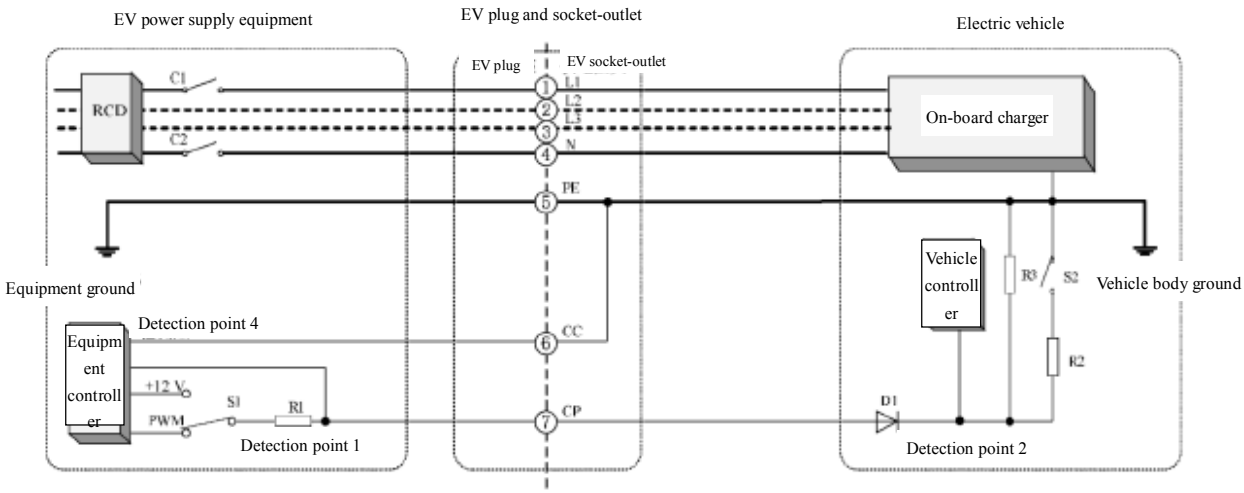

Key

C1, C2, … - AC contactor/relay inside power supply equipment;

S1 - PWM signal switching switch inside power supply equipment;

R1 - Resistance of control pilot circuit inside power supply equipment;

S2 - Switch of control pilot circuit inside vehicle;

R2, R3 - Resistance of ontrol pilot circuit inside vehicle.

Internal use only, not for resale or public post.

RCD can be integrated with power supply equipment or installed separately.

Figure A.1 - Schematic diagram of control pilot circuit for mode 3 case A connection

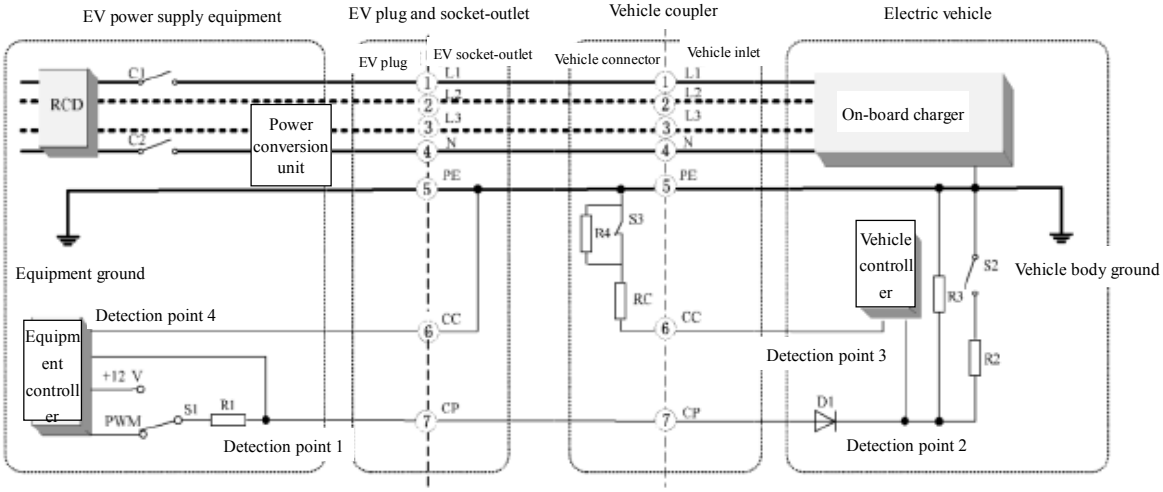

Key

C1, C2, … - AC contactor/relay inside power supply equipment;

S1 - PWM signal switching switch inside power supply equipment;

R1 - Resistance of control pilot circuit inside power supply equipment;

S3 - Normally closed switch inside vehicle connector;

R4, RC - Resistance of control pilot circuit inside vehicle connector;

S2 - Switch of control pilot circuit inside vehicle;

R2, R3 - Resistance of ontrol pilot circuit inside vehicle.

RCD can be integrated with power supply equipment or installed separately.

Figure A.2 - Schematic diagram of control pilot circuit for mode 3 case B connection

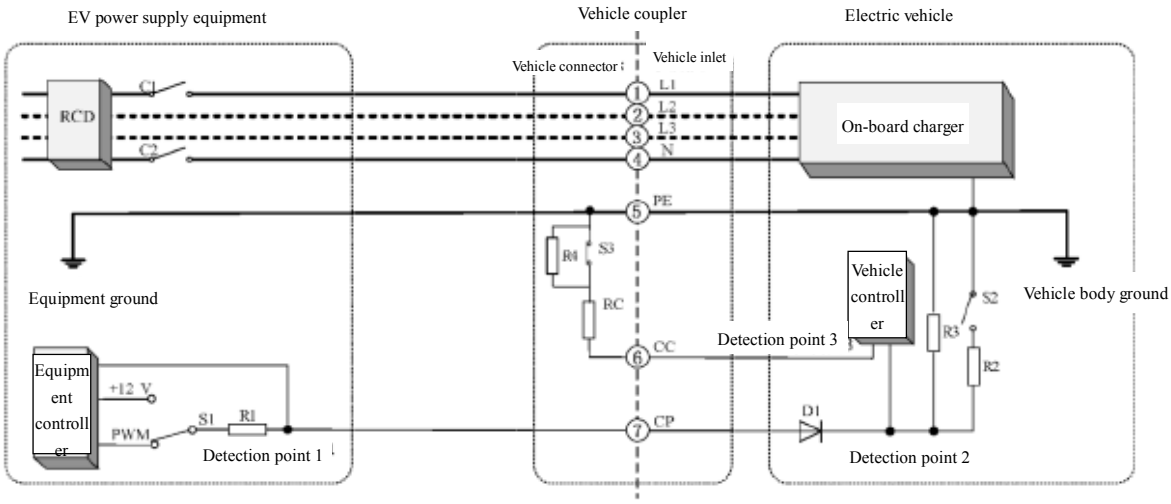

Key

C1, C2, … - AC contactor/relay inside power supply equipment;

S1 - PWM signal switching switch inside power supply equipment;
R1 - Resistance of control pilot circuit insidepower supply equipment;
S3 - Normally closed switch inside the vehicle connector;
R4, RC - Resistance of control pilot circuit insidevehicle connector;
S2 - Switch of control pilot circuit inside vehicle;
R2, R3 - Resistance of ontrol pilot circuit inside vehicle.
RCD can be integrated with power supply equipment or installed separately.

Figure A.3 - Schematic diagram of control pilot circuit for mode 3 case C connection

Table A.1 - Parameters of control pilot circuit

Object	Parameter[a]	Symbol	Unit	Nominal value	Max. value	Min. value
Power supply equipment	Output high voltage	+Vcc	V	12.00	12.60	11.40
	Output low voltage	-Vcc	V	-12.00	11.40	-12.60
	Output freqency	f	Hz	1 000.00	1 020.00	980.00
	Output duty cycle tolerance	Dco	—	—	+0.5%	-0.5%
	Signal setting time[b,c]	Ts	μs	n.a.	3	n.a.
	Signal rise time [c](10 %~90 %)	Tr	μs	n.a.	2	n.a.
	Signal drop time [c] (90%~10%)	Tf	μs	n.a.	2	n.a.
	R1equivalent resistance[d]	R1	Ω	1 000	1 030	970
	Capacitance[e]	Cs	pF	—	1 600	300
EV	R2equivalent resistance[d]	R2	Ω	1 300	1 339	1 261
	R3equivalent resistance[d]	R3	Ω	2 740	2 822	2 658
	Equivalent diode voltage drop (2.75~10 mA, -40℃~+85℃)	Vd1	V	0.70	0.85	0.55
	Input duty cycle tolerance	Dci	—	—	+ 1.5%	-1.5%
	Capacitance[f]	Cv	pF	—	2 400	—
Cable	Capacitance[g]	Cc	pF	—	1500	—

[a]Must meet the accuracy requirements under both service environmental conditions and within sevice life.
[b]The time it takes from the beginning of transition to 95% of its stable value.
[c]Refer to the design requirements for the source end signal of the power supply equipment signal generator. The detection at the vehicle coupler shall meet the requirements of relevant testing standards.
[d]The recommended accuracy for equivalent resistance is ± 3%.
[e]For mode 3 case C connection and mode 2 cables, the maximum equivalent capacitance is the sum of Cc+Cs.
[f]For Mode 3 case A connection., the maximum equivalent capacitance is the sum of Cc+Cv.
[g]For charging cables of case B connection.

A.1.2 Mode 2

When electric vehicle uses Mode 2 for charging, the control pilot circuit shown in Figure A.4 shall be used to confirm the connection of the charging connection device and determine the rated current parameters.

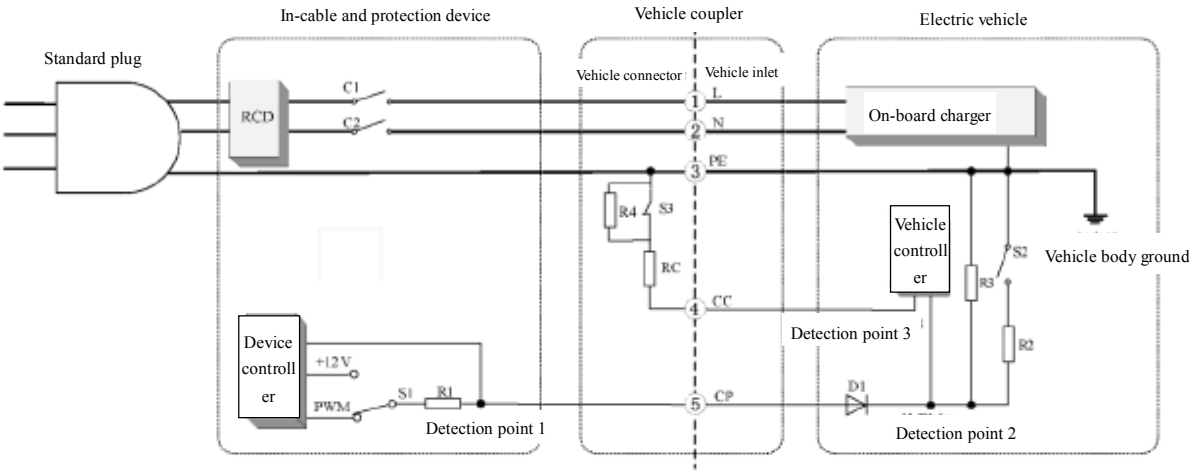

Key

C1, C2 - AC contactor/relay inside power supply equipment;

S1 - PWM signal switching switch inside power supply equipment;

R1 - Resistance of control pilot circuit inside power supply equipment;

S3 - Normally closed switch inside vehicle connector;

R4, RC - Resistance of control pilot circuit insidevehicle connector;

S2 - Switch of control pilot circuit inside vehicle;

R2, R3 - Resistance of ontrol pilot circuit inside vehicle.

The installation requirements of RCD shall comply with the provisions of GB/T 41589.

Figure A.4 - Schematic diagram of control pilot circuit for Mode 2

A.2 Basic functions of control pilot circuit

A.2.1 Connection confirmation and electronic lock

The vehicle controller determines whether the vehicle connector is fully connected to the vehicle inlet by measuring the resistance value between detection point 3 and PE (for case B and case C connection). After complete connection, if the vehicle inlet is equipped with an electronic lock, the electronic lock shall lock the vehicle connector before starting energy transfer and hold throughout the entire energy transfer phase (state 3). If it cannot be locked, the next step is decided by the electric vehicle, such as continuing to charge, notifying the operator and waiting for further instructions or terminating the charging. The device controller determines whether the EV plug and socket-outlet are fully connected (for case A connection and case B connection) by measuring the voltage at detection point 1 or detection point 4. After complete connection, if an electronic lock is equipped in the EV socket-outlet, the electronic lock in the EV socket-outlet shall lock the EV plug before starting power supply (C1 and C2 closed) and remain locked throughout the entire energy transfer phase (state 3). If unable to lock, terminate charging and prompt the operator.

A.2.2 Identification of the current carrying capacity of the charging connection

device and the power of the power supply equipment

The vehicle controller confirms the rated capacity of the current charging connection device (cable) by measuring the resistance value between detection point 3 and PE,and confirms the maximum power supply current of the current power supply equipment by measuring the PWM signal duty cycle at detection point 2. The oscillator voltage is shown in Figure A.5.

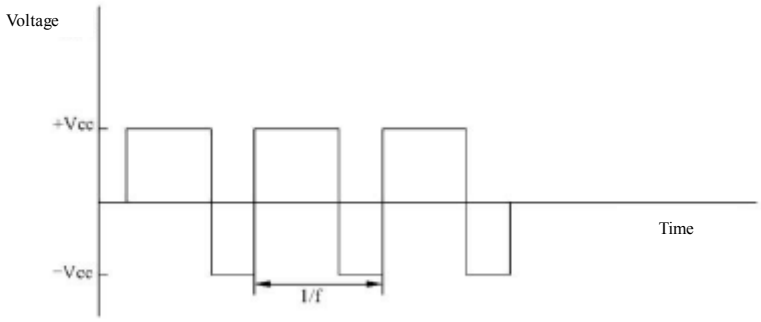

Key

Vcc - Oscillator voltage amplitude

f - Oscillator voltage frequency

Figure A.5 - Oscillator voltage

The mapping relationship between duty cycle and charging current limit is shown in Tables A.2 and A.3. The power supply equipment shall set the duty cycle of the PWM control pilot signal according to Table A.2 to inform the electric vehicle of its maximum power supply current, and this value shall not exceed the provisions of 5.2.1.6.

Table A.2 - Mapping relationship between duty cycle generated by power supply equipment and charging current limit

PWM duty cycleD	Maximum charging current I_{max} A
D=0%, continuous -12 V	Power supply equipment unavailable
D = 5%	A 5% duty cycle indicates the need for digital communication, and it is necessary to establish communication between the power supply equipment and the electric vehicle before energy transfer
10%≤D≤85%	I_{max}= D×100×0.6
85%≤D≤90%	I_{max}= (D×100 —64) ×2.5, and I_{max}≤63
90%≤D≤97%	Reserve
D=100%, continuous positive voltage	Not allowed

Table A.3 - Mapping relationship between duty cycle and charging current limit

Internal use only, not for resale or public post.

for electric vehicle detection

PWM duty cycleD	Maximum charging current I_{max} A
D<3%	Charging not allowed
3%≤D≤7%	A 5% duty cycle indicates the need for digital communication and it is necessary tobe established between the power supply equipment and the electric vehicle before energy transfer. Charging is not allowed without digital communication
7%≤D<8%	Charging not allowed
8%≤D<10%	I_{max} =6
10%≤D≤85%	I_{max} = D×100×0.6
85%<D≤90%	I_{max} = (D×100 —64) ×2.5, and I_{max}≤63
90%<D≤97%	If charging is allowed, I_{max}≤63
D>97%	Charging not allowed

A.2.3 Monitoring of charging process

During the charging process, the vehicle controller shall monitor the resistance value between detection point 3 and PE (for case B and C connection) and the PWM signal duty cycle of detection point 2. The device controller shall also monitor the voltage values of detection point 4 and detection point 1 (for case A and B connection of mode 3).

A.2.4 Stop of charging system

During the charging process, when the charging is completed or the conditions for continuing to charge cannot be met for other reasons, the vehicle controller and device controller respectively stop the relevant control functions of charging.

A.2.5 Monitoring of voltage and corresponding charging process state of detection point 1

According to the control pilot circuit parameters specified in Table A.1, Table A.4 provides the voltage and corresponding charging process states of detection point 1, while taking into account measurement errors of power supply equipment.

There is no undefined voltage range for detection point 1 between the charging process states. If the voltage state of detection point 1 is within the numerical range specified in Table A.4, it is considered a valid state.

NOTE In order to reliably detect the charging process states, the measured value of detection point 1 is averaged within a few milliseconds or PWM cycle.

Internal use only, not for resale or public post.

The power supply equipment shall be able to conduct or disconnect the AC power supply circuit within the time specified in Table A.7.

Table A.4 - Voltage state and corresponding charging process state of detection point 1

Voltage at detection point1 [a] V			Output PWM[b]	State of charging process	Charging connection device connected	S2 State[c]	Vehicle ready for charging[e]	Power supply equipment ready for charging [e]	Remarks
Min value	Nominal value	Max. value							
11	12	13	No	State 1	No	Not applicable	No	No	Voltage at detection point 2 is 0 V
11	12	13	Yes	State1’[f]			No	Yes	
10		11	Yes/ No	State1/1’ or State2/2’	No / Yes	Open	No	Depending on the present functional requirements	
8	9	10	No	State2	Yes	Open	No	No	R3 is detected
8	9	10	Yes	State2’[f]			No	Yes	
7		8	Yes / No	State2/2’ or State3/3’		Open/ Close	Depending on the present functional requirements		
5	6	7	No	State3		Close	Yes	No	R2 is detected
5	6	7	Yes	State3’[f]			Yes	Yes	
4		5	Yes / No	State3/3’ [f]			Yes	Depending on the present functional requirements	
1		4	Yes / No	State0 or invalid		Open/ Close	Depending on the present functional requirements		
-1	0	1	No	State0	Not applicable	Not applicable	Not applicable		No
-10		- 1	Yes / No	Invalid	Not applicable	Not applicable	Not applicable		Control circuit fault[d]
-11		-10	No	State4 or invalid	Not applicable	Not applicable	Not applicable	No	
-13	-12	-11	No	State4	Not applicable	Not applicable	Not applicable	No	
-11		-10	Yes	State1’/2’/3’ or invalid	No/Yes	Open / Close	Depending on the present functional requirements		
-13	-12	-11	Yes	State1’/2’/3’	Not applicable	Not applicable	Depending on the present functional requirements		PWM signal low level

[a] All voltages are effective values measured after stabilization

[b] Output PWM indicates that switch S1 in the power supply equipment switches to PWM and generates a square wave voltage of ± 12 V; Not outputting PWM indicates that the switch S1 in the power supply equipment switches to+12 V and generates a steady-state DC voltage.

Internal use only, not for resale or public post.

[c] Switch S2 is inside the vehicle, and only for vehicles with S2 switch. As shown in Figure A.1, Figure A.2, Figure A.3, and Figure A.4.
[d] Vehicle charging ready: The vehicle has closed switch S2 and is ready to enter the energy transfer process
[e] Power supply equipment ready for charging: output PWM; Power supply equipment charging not ready: not output PWM
[f] The low-level range error of the PWM signal is defined in the last line

A.2.6 Diode presence detection

Before energy transfer, the power supply equipment shall be able to verify the presence of diode D1 on the control pilot circuit to verify that it is connected to an electric vehicle rather than a load device. This detection shall be conducted at least once from state X (X=1, 2,3, defined in Table A.4) to state X 'or during state X' before the power supply equipment conducts the AC power supply circuit. When the low-level state of the PWM signal is detected to be within the voltage range specified in Table A.4, it is judged that diode D1 exists on the control pilot circuit and that it is connected to an electric vehicle or electric vehicle simulator.

A.3 Operating control program for charging process

A.3.1 Connect vehicle connector andvehicle inlet, make electric vehicle in a non drivable state

When fully connected and S3 is in a closed state, i.e. CC is connected, the electric vehicle shall be in a non drivable state.

After the vehicle connector is connected to the vehicle inlet (EV plug and EV socket-outlet of case A connection), the electric vehicle can automatically start a certain triggering condition (such as opening the charging door, connecting the vehicle connector to the vehicle inlet, or setting the function trigger of the electric vehicle's charging button, switch, etc.), and put the electric vehicle in a non drivable state through locking devices or other control measures.

A.3.2 Confirm that the EV plug and socket-outlet is fully connected (for case A and B connection)

The device controller determines whether the EV plug is fully connected to the EV socket-outlet by measuring the voltage value of detection point 4.

A.3.3 Confirm that the vehicle coupler is fully connected (for case B and C connection)

The vehicle controller determines whether the vehicle connector is fully connected to the vehicle inlet by measuring the resistance value between detection point 3 and PE. When not connected, S3 is in a closed state, CC is not connected, and the resistance value between detection point 3 and PE is infinite; When half connected, S3 is in a disconnected state, CC is connected, and the resistance value between detection point 3 and PE is RC+R4; When fully connected, S3 is in a closed state, CC is connected, and the resistance value between detection point 3 and PE is RC.

A.3.4 Confirm whether the charging connection device is fully connected

Internal use only, not for resale or public post. www.gbstandards.org

The device controller determines whether the charging connection device is fully connected by measuring the effective voltage value of detection point 1. When fully connected, the effective voltage value of detection point 1 shall be the voltage value corresponding to state 2 (if the vehicle is equipped with S2) or state 3 in Table A.4.

A.3.5 Power supply equipment ready

If there is no fault in the power supply equipment and the effective voltage value of detection point 1 is the voltage value corresponding to state 2 (if the vehicle is equipped with S2) or state 3 in Table A.4, the power supply equipment shall switch S1 from the connected+12 V state to the PWM connected state and issue a PWM signal. The vehicle controller determines whether the device controller is ready by measuring the PWM signal at detection point 2.

A.3.6 Vehicle ready

When the vehicle completes self check and is in the allowed charging state, for vehicles equipped with switch S2, the vehicle controller shall also close switch S2. If the vehicle is equipped with a "charging request" or "charging control" function, it shall also meet the requirement that the vehicle is in a "charging request" or "rechargeable" state.

The device controller determines whether the vehicle controller is ready by measuring the voltage effective value or high-level voltage value (when outputting PWM signal) at detection point 1 to the voltage value/high-level corresponding to state 3/state 3'in Table A.4.

A.3.7 Energy transfer

A.3.7.1 When the effective voltage value of detection point 1 is the voltage value corresponding to state 3 in Table A.4, the equipment controller conducts the AC power supply circuit by closing contactors C1 and C2, and the EV plug and socket-outlet equipped with an electronic lock shall be reliably locked.

A.3.7.2 After establishing an electrical connection between the electric vehicle and the power supply equipment, the vehicle controller confirms the maximum power supply capacity of the power supply equipment by judging the PWM signal duty cycle of detection point 2, and confirms the rated capacity of the cable by judging the resistance value between detection point 3 and PE. The connection status of the vehicle and the resistance value of RC are shown in Table A.5. The vehicle controller compares the maximum charging current value presently provided by the power supply equipment, the rated input current value of the on-board charger, and the rated capacity of the cable, and sets its minimum value as the current maximum allowable input current of the on-board charger. After the vehicle controller determines that the charging connection device is fully connected and completes the maximum allowable input current setting of the on-board charger, the on-board charger begins to charge the electric vehicle, and the vehicle coupler equipped with an electronic lock shall be reliably locked.

A.3.7.3 In energy transfer, when the PWM signal from detection point 2 is received, the maximum allowable input current setting of the on-board charger depends on the power

Internal use only, not for resale or public post.

supply capacity of the power supply equipment, the current carrying value of the charging cable, and the minimum rated current of the on-board charger.

Table A.5 - Vehicle coupler connection state and RC resistance values

State	RC	R4	S3	Vehicle coupler connection state and rated current
StateA	—	—	—	Vehicle coupler not connected
StateB	—	—	Open	Mechanical lock is in the unlocked state
StateC	1.5 kΩ/0.5 W[a]	—	Close	Vehicle coupler is fully connected, and the charging cable capacity is 10A
StateC’	1.5 kΩ/0.5 W[a]	1.8 kΩ/0.5 W[b.]	Open	Vehicle coupler is connected, but switch S3 is in a open state
StateD	680 Ω/0.5 W[a]	—	Close	Vehicle coupler is fully connected, and the charging cable has a capacity of 16A
State D’	680 Ω/0.5 W[a]	2.7 kΩ/0.5 W[b.]	Open	Vehicle coupler is connected, but switch S3 is in a openstate
StateE	220 Ω/0.5 W[a]	—	Close	Vehicle door is fully connected, and the charging cable has a capacity of 32 A
StateE’	220 Ω/0.5 W[a]	3.3 kΩ/0.5 W[b.]	Open	Vehicle coupler is connected, but switch S3 is in a open state
StateF	100Ω/0.5 W[a]	—	Close	Vehicle door is fully connected, and the charging cable has a capacity of 63 A
StateF’	100Ω/0.5 W[a]	3.3 kΩ/0.5 W[b.]	Open	Vehicle coupler is connected, but switch S3 is in a open state
NOTEVehicle selects the appropriate pull-up voltage U2 and internal resistance to identify different charging states.				
[a,b]The accuracy of resistors RC and R4 is ± 3%.				

A.3.8 Check the connection state of the EV plug and socket-outlet and the changes in the supply capacity of the power supply equipment

A.3.8.1 During the charging process, the vehicle controller periodically monitors detection points 2 and 3, while the equipment controller periodically monitors detection points 1 and 4 to confirm the connection state between the EV plug and socket-outlet and the vehicle coupler. The monitoring period is not more than 50 ms.

A.3.8.2 The vehicle controller continuously detects the PWM signal of detection point 2. When the duty cycle changes, the vehicle controller adjusts the output power of the on-board charger in real time based on the PWM duty cycle. The time from the PWM duty cycle change to the adjustment of the output power of the on-board charger shall not exceed 5 seconds.

A.3.9 Charging shutdown under normal conditions

Internal use only, not for resale or public post.

A.3.9.1 In the energy transfer stage, when the end condition set by the vehicle is reached or the driver implements a command to stop charging the vehicle, the vehicle controller disconnects switch S2 and puts the on-board charger in a stop charging state.

A.3.9.2 In the energy transfer stage, when the end conditions set by the operator are reached and the operator implements a command to stop charging the power supply device (if equipped with a setting function), the equipment controller shall be able to switch the control switch S1 to the+12 V connection state. The vehicle controller shall reduce the charging current to the minimum (<1 A) within 3 seconds, and then disconnect switch S2 within 3 seconds.

When the device controller detects that switch S2 is disconnected, it shall cut off the AC power supply circuit within 100 ms by disconnecting the contactors C1 and C2. When the device controller does not detect S2 disconnection within 6 s starting from S1switching to+12 V connection state, the device controller shall forcibly disconnect the AC power supply circuit by disconnecting the contactors C1 and C2 on load. For case A and B connection, the electronic lock of the EV plug and socket-outlet shall be unlocked after cutting off the AC power supply circuit for 100 ms.

A.3.10 Charging sutdown under abnormal conditions

A.3.10.1 Before energy transfer, the vehicle controller detects that the resistance value between PE and detection point 3 (for case B and C connection) shall be 95% to 105% of the resistance value specified in Table A.5. If it exceeds this range, the vehicle shall not allow charging and shall not close S2 (if the vehicle is equipped with S2).

A.3.10.2 In the energy transfer stage, the vehicle controller determines the connection state of the vehicle connector and inlet by detecting the resistance value between PE and detection point 3 (for case B and C connection). If it is determined that switch S3 has changed from closed to open (state B), the vehicle controller disconnects switch S2 (if the vehicle is equipped with S2) within 1 second, and the on-board charger reduces the charging current to the lowest (<1 A).

A.3.10.3 In the energy transfer stage, the vehicle controller determines the connection state of the vehicle connector and inlet by detecting the resistance value between PE and detection point 3 (for case B and C connection). If it is determined that the vehicle coupler has changed from fully connected to disconnected (state A), the vehicle controller controls the on-board charger to stop charging within 1 second and disconnects its S2 switch within 3 seconds after the fault occurs (if the vehicle is equipped with S2).

A.3.10.4 In the energy transfer stage, the vehicle controller detects the PWM signal of detection point 2. When the signal is interrupted, the vehicle controller shall control the on-board charger to stop charging within 3 seconds, and then disconnect S2 within 3 seconds (if the vehicle is equipped with S2).

A.3.10.5 In the energy transfer stage, if the voltage value of detection point 1 is 12 V (state 1), 9 V (state 2), or other non-6 V (state 3) states, the equipment controller shall disconnect the AC power supply circuit within 100 ms.

Internal use only, not for resale or public post.

A.3.10.6 In the energy transfer stage, if a loss of electrical continuity of the protective earthing conductor is detected, the equipment controller S1 switches to+12 V connection state and disconnect the AC power supply circuit within 100 ms.

A.3.10.7 In the energy transfer stage, the device controller detects point 4 (for case A and B connection of mode 3). If it detects that the EV plug and socket-outlet has changed from fully connected to disconnected (state A), the device controller controls S1 to switch to+12 V connection state and disconnects the AC power supply circuit within 100 ms.

A.3.10.8 In the energy transfer stage, if the residual current protector (residual current circuit breaker) is activated, the on-board charger is in a state of power loss, and the vehicle controller disconnects switch S2.

A.3.10.9 In the energy transfer stage, the power supply equipment detects the actual operating current of the on-board charger. When (1) the maximum power supply current corresponding to the PWM signal of the power supply equipment is ≤20 A, and the actual operating current of the on-board charger exceeds the maximum power supply current corresponding to the PWM signal by+2 A and remains for 5 seconds, or (2) the maximum power supply current corresponding to the PWM signal of the power supply equipment is>20 A, and the actual operating current of the on-board charger exceeds 1.1 times the maximum power supply current corresponding to the PWM signal and remains for 5 seconds, the power supply equipment shall disconnect the AC power supply circuit within the next 5 seconds and control S1 to switch to the+12 V connection state.

A.3.10.10 In the energy transfer stage, the power supply equipment detects the actual operating current of the on-board charger. When the actual operating current of the on-board charger exceeds the maximum carrying capacity of the power supply equipment components (such as relays and cables) and remains for 5 seconds, the power supply equipment shall disconnect the AC power supply circuit within the next 5 seconds and control S1 to switch to the +12 V connection state.

A.3.10.11 In the energy transfer stage, if the vehicle S2 is open (the voltage value at detection point 1 is 9 V), the equipment controller shall disconnect the AC power supply circuit within 100 mS and continuously output a PWM signal. During the continuous output of PWM signal, when S2 closes again, the device controller shall conduct the AC power supply circuit within 3 seconds.

NOTE 1: The duration of continuously outputting PWM signals here can be customized by the power supply equipment manufacturer, which is equivalent to the duration of continuously outputting PWM signals when the power supply equipment is ready and waiting for the electric vehicle to close S2.

NOTE 2: The requirements for power supply equipment and electric vehicles that support orderly charging function can be found in the relevant orderly charging standards.

NOTE 3: If the device controller cuts off the power supply circuit and ends charging due to the charging connection device changing from fully connected to disconnected (state 1 in Table A.4 and state A in Table A.5), the operator needs to check and restore the connection

Internal use only, not for resale or public post.

and restart the charging setting before charging can proceed.

A.3.10.12 When the EV plug and socket-outlet is fully connected but the AC power supply circuit is not closed (T1'- T2 '), if there is an abnormal connection, the equipment controller shall control S1 to switch to+12 V connection state within 100 ms without closing the AC power supply circuit.

A.4 Charging connection control timing

The AC charging connection process and control timing of the vehicle equipped with switch S2 are shown in Figures A.6 and A.7.

Scenario a: Normal shutdown of vehicle, 1.1→3.1→ 4 → 5 (→6) → 7 → 8.1 → 2.1 → 9.3，as shown in Figure A.6;

Scenario B: Normal shutdown of power supply equipment, 1.1→3.1→ 4 → 5 (→6) →9.1 → 10.1，as shown in Figure A.7.

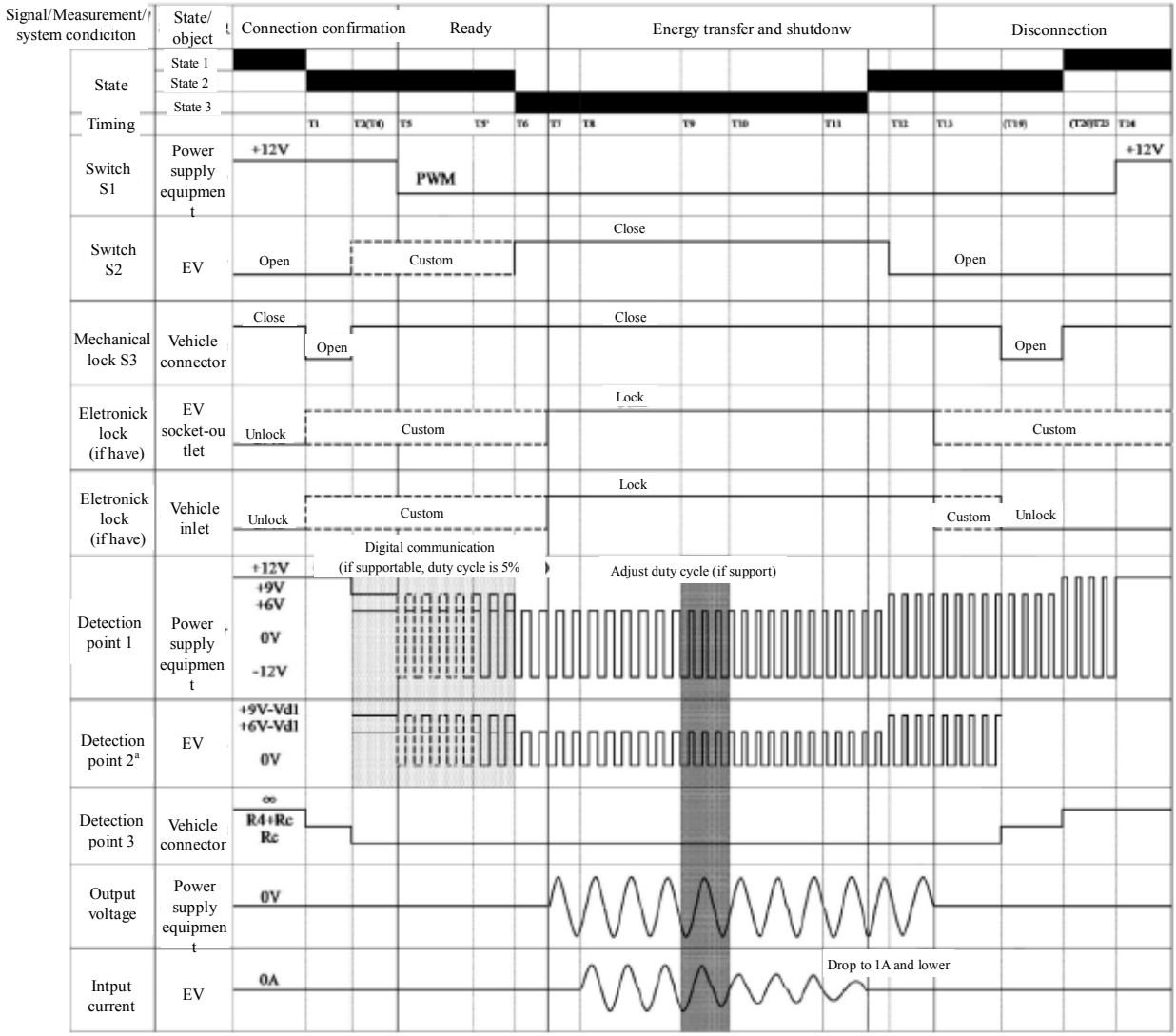

Key

Switch S2 closed range

Duty cycle adjustment range

NOTE 1: For power supply equipment with an operation interface, completing human-machine interaction such as charging parameter settings, confirmation operations, and scheduling charging (optional) before T5.

NOTE 2: After connecting the device, close switch S2 during (T2-T6) when the vehicle is ready. When S2 is disconnected, the effective voltage value of detection point 1 corresponds to state 2/state 2'; After S2 is closed, the effective voltage value of detection point 1 corresponds to state 3/state 3'. Refer to S2 closed range in the figure.

NOTE 3: The time from entering state 3'to conducting the AC power supply circuit of the power supply equipment (T6-T7) is less than 3 seconds.

NOTE 4: If duty cycle adjustment is supported, T9 is the PWM duty cycle adjusted by the power supply equipment output, and (T9-T10) is the vehicle response duty cycle adjustment time not exceeding 5 seconds.

NOTE 5: The time from disconnecting switch S2 from the vehicle to disconnecting the AC power supply circuit from the power supply equipment(T12-T13) is less than 100 ms.

NOTE 6: When switch S2 is disconnected and the connecting device remains connected, PWM shall continue to output (T12-T23).

NOTE 7: The time from disconnection of the connecting device to PWM stop output (T23-T24) is less than 100 ms.

NOTE 8: If digital communication is supported, (T5-T5') is a PWM output with a duty cycle of 5% for the power supply equipment.

NOTE 9: The dashed line in the figure represents the reference state.

[a]The voltage at detection point 2 will be affected by the diode voltage drop, and Vd1 in the figure represents the diode voltage drop.

Figure A.6 –Timing diagram of AC charging connection control (activeterminated byvehicle)

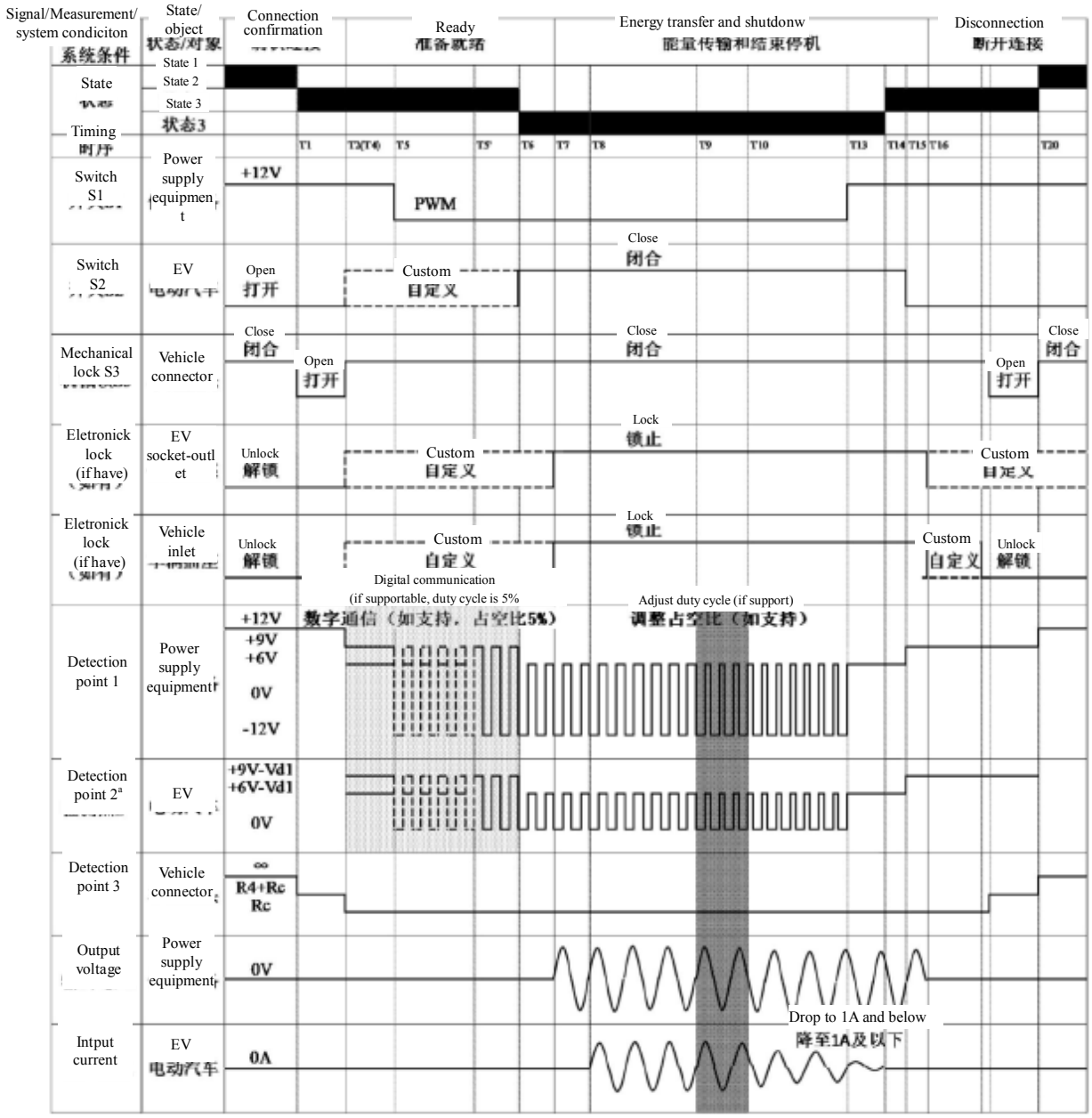

Key

Switch S2 closed range

Duty cycle adjustment range

NOTE 1: For power supply equipment with an operation interface, complete human-machine interaction such as charging parameter settings, confirmation operations, and scheduling charging (optional) before T5.

NOTE 2: After connecting the device, close switch S2 during (T2-T6) when the vehicle is ready. When S2 is disconnected, the effective voltage value of detection point 1 corresponds to state 2/state 2'; After S2 is closed, the effective voltage value of detection point 1 corresponds to state 3/state 3'.

NOTE 3: The time (T6-T7) from entering state 3'to conducting the AC power supply circuit of the power supply equipment is less than 3 seconds.

NOTE 4: If duty cycle adjustment is supported, T9 is the PWM duty cycle adjusted by the power

supply equipment output, and (T9-T10) is the vehicle response duty cycle adjustment time not exceeding5 seconds

NOTE 5: The time (T13-T14) from the switching of S1 switch to+12V connection state by the power supply equipment until the vehicle charging current decreases to the lowest (<1A) is less than 3 seconds.

NOTE 6: The time (T15-T16) from the vehicle opening S2 to the disconnection of the AC power supply circuit by the power supply equipment is less than 100 ms.

NOTE 7: If the vehicle does not respond to the power supply equipment stopping charging, the time (T13-T16) from switching switch S1 to+12 V connection state to disconnecting the AC power supply circuit is greater than 6 seconds.

NOTE 8: If digital communication is supported, (T5-T5 ') is a PWM output with a duty cycle of 5% for the power supply equipment.

NOTE 9: The dashed line in the figure represents the reference state.

[a]The voltage at detection point 2 will be affected by the diode voltage drop, and Vdl in the figure represents the diode voltage drop.

Figure A.7 Timing diagram of AC charging connection control (activeterminated by power supply equipment)

The AC charging connection process and control timing of the vehicle without switch S2 are shown in Figures A.8 and A.9.

Scenario a: Normal shutdown of power supply equipment, 1.2→3.2→ 4 → 5 →9.1→10.1， as shown in Figure A.8;

Scenario B: Normal shutdown of EV plug and EV socket-outlet, 1.2→3.2→ 4 → 5 →2.2→9.3， as shown in Figure A.8.

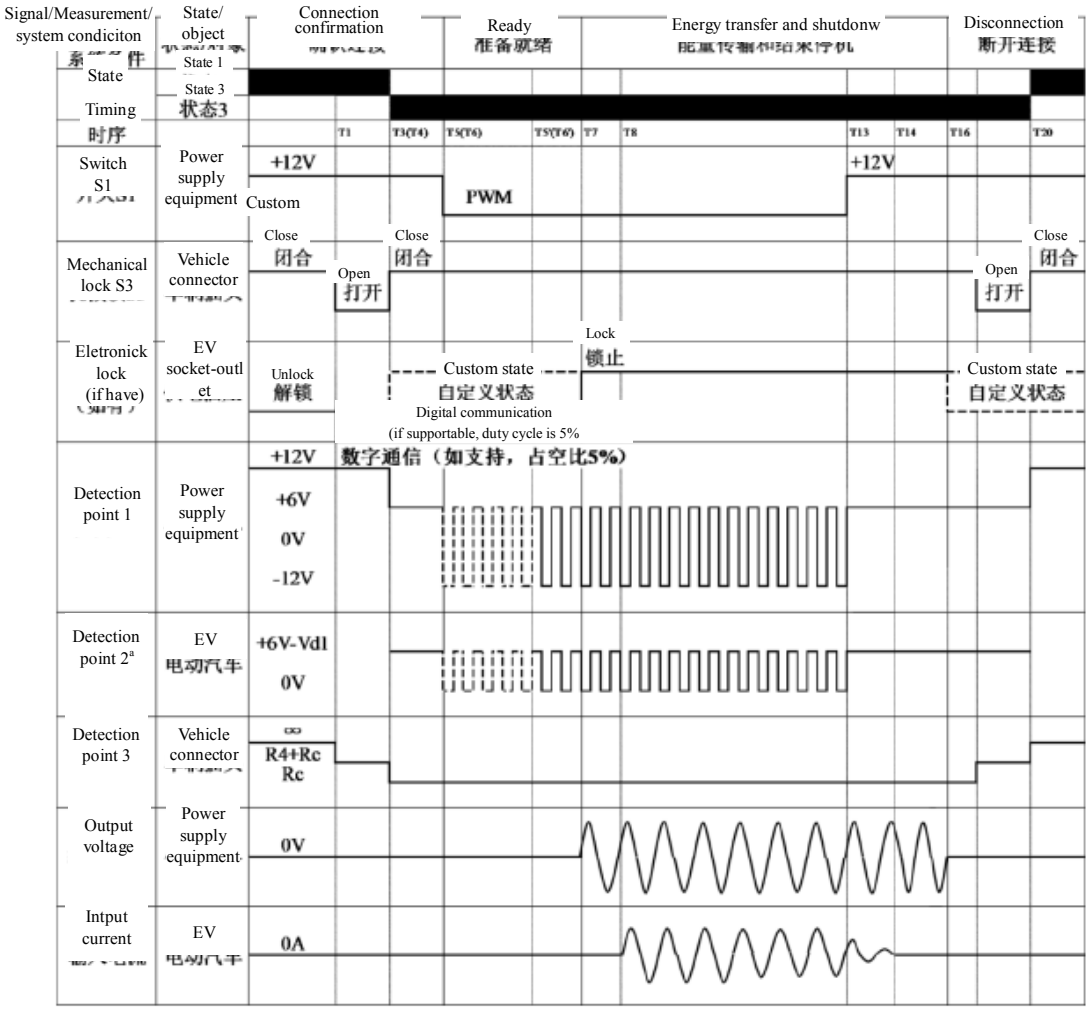

NOTE 1: For power supply equipment with an operation interface, complete human-machine interaction such as charging parameter settings, confirmation operations, and scheduling charging (optional) before T7.

NOTE 2: The time (T6-T7) from the power supply equipment entering state 3'to the power supply equipment conducting the AC power supply circuit is less than 3 seconds.

NOTE 3: The time (T13-T14) from switching S1 switch to+12 V connection state by the power supply equipment until the vehicle charging current decreases to the lowest (<1A) is less than 3 seconds

NOTE 4: If the vehicle does not respond to the power supply equipment stopping charging, the time from switching S1 switch to+12V connection state to disconnecting the AC power supply circuit (T13-T16) is greater than 6 seconds.

NOTE 5: If digital communication is supported, T5 (T6) - T5'(T6') is a PWM with an output duty cycle of 5% for the power supply equipment.

NOTE 6: The dashed line in the figure represents the reference state.

[a]The voltage at detection point 2 will be affected by the diode voltage drop, and Vd1 in the figure represents the diode voltage drop.

Figure A.8 Timing diagram of AC charging connection control without switch S2 (actively terminated by power supply equipment)

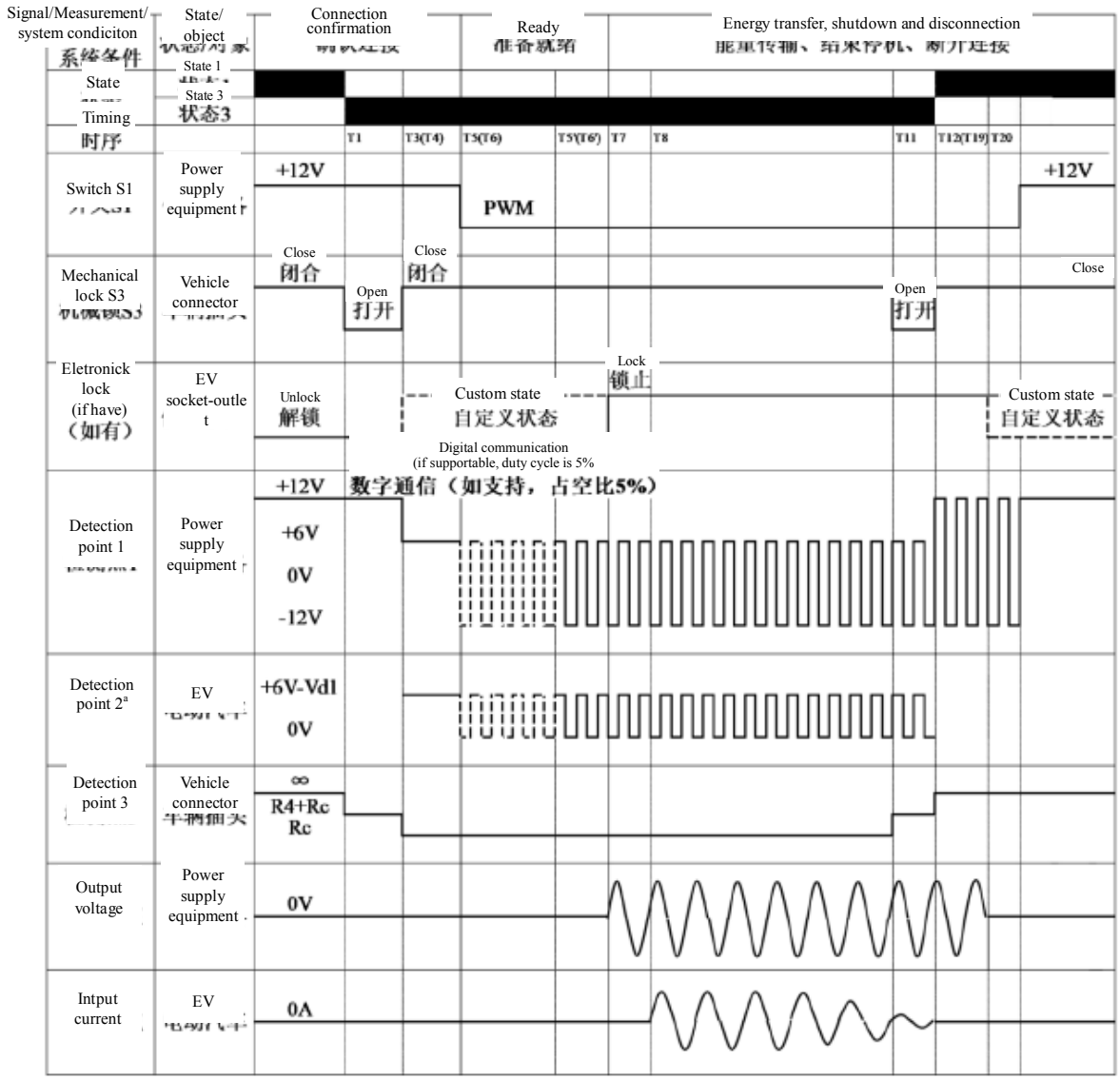

NOTE 1: For power supply equipment with an operation interface, complete human-machine interaction such as charging parameter settings, confirmation operations, and scheduling charging (optional) before T7.

NOTE 2: The time (T6-T7) from entering the power supply equipment in state 3'to conducting the AC power supply circuit is less than 3 seconds.

NOTE 3: The time (T11-T12) from pressing the S3 switch to the vehicle charger to reduce the charging current to the lowest (<1 A) is less than 1 second.

NOTE 4: The time (T19-T20) from the disconnection of the connecting device to the disconnection of the AC power supply circuit by the power supply equipment is less than 100 ms.

NOTE 5: If digital communication is supported, T5 (T6) - T5'(T6') is a PWM with an output duty cycle of 5% for the power supply equipment.

NOTE 6: The dashed line in the figure represents the reference state.

[a]The voltage at detection point 2 will be affected by the diode voltage drop, and Vd1 in the figure represents the diode voltage drop.

Figure A.9 Timing diagram of AC charging connection control without switch S2 (terminate by disconnecting vehicle coupler)

A.5 State transition diagram and control timing list of control pilot circuit

The state transition between state 1, state 2, and state 3 are triggered by electric vehicles or user opeartion.

The state transition between states X and X'(X=l, 2,3) is characterized by whether the power supply equipment outputs a PWM signal, and also indicates whether the power supply equipment is ready to charge, as shown in Table A.6.

Table A.6 - Description of AC charging state guideline

State	Descritption	Guideline
StateX [a]	The power supply equipment cannot conduct energy. For example: – Due to the inability of the supply network to provide available energy; – Power supply equipment shuts down due to intermittent or other power supply limitations	When energy transfer is possible, the power supply equipment will change to state X' according to sequence 3.1 or 3.2 in Table A.7. The electric vehicle can trigger to start (close S2) or restore charging
State 0	This state is caused by a fault condition. For example: – Power outage of power supply equipment (such as no power output from the supply network). – Short circuit between CP and PE at the vehicle coupler Power supply equipment shall not intentionally use this state for signal transmission	For case A and B connection, the electronic lock of the EV plug and socket-outlet should be unlocked after the AC power supply circuit is cut off for 100 ms
State 4	This state is set by the power supply equipment as a fault state signal, for example: – Maintenance of the power supply equipment is required	For case A and B connection, the electronic lock of the EV plug and socket-outlet should be unlocked after AC power supply circuit is cut off for 100 ms
NOTE 1: In the event of a power outage, if the power supply equipment has a backup battery, it can remain in state X. After the battery runs out, the power supply device enters state 0. NOTE 2: If the locking device is triggered by user authorization, only when both entering state 0/4 and obtaining user authorization again are met can the EV socket-outlet be unlocked.		
[a] State X can indicate state 1, state 2, or state 3, which means that the power supply device does not output a PWM signal. [b] State X 'can indicate state 2' or state 3', which means that the power supply equipment outputs a PWM signal.		

After changing to state 4 and the reason for switching to state 4 persists, the power supply equipment of case C connection shall:

– Maintain state 4, or

– Maintain state 4 for at least 300 ms, then switch to state X (and hold) to detect if there is an electric vehicle connected.

If the fault still persists after disconnecting the charging connection device, the power supply equipment shall:

– Maintain or switch state 4, or

- If the power supply device displays as "unavailable" (such as on the display screen), maintain in state X.

When there is no fault with the power supply equipment that cannot continue charging, state 4 shall not be used as a signal that the power supply equipment cannot transmit energy to the electric vehicle.

Can switch from state 0 or state 4 to any other state (X or X ').

The state transition of the AC charging control pilot circuit is shown in Figure A.10.

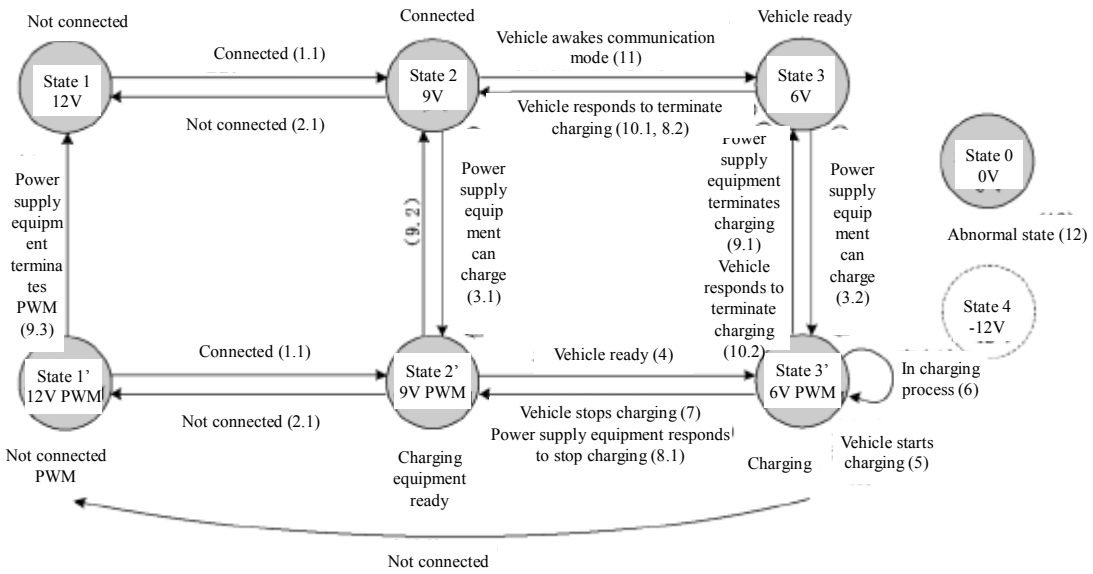

NOTE 1: Not all state transitions and sequences described in Table A.7 are displayed in this figure. For example, it is possible to switch from any state to state 1 or state 1', state 0, and state 4 at any time.

NOTE 2: The numbers in parentheses in the figure correspond to the timing specified in Table A.7.

Figure A.10 - State transitiondiagram of AC charging control pilot circuit

The state transitionof the AC charging control pilot circuit without switch S2 is shown in Figure A.11.

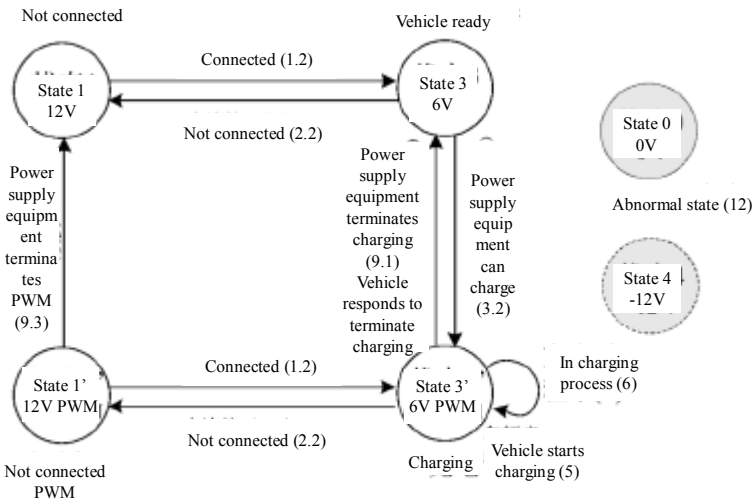

NOTE 1: Not all state transitions and sequences described in Table A.7 are displayed in this figure. For example, it is possible to switch from any state to state 1 or state 1', state 0, and state 4 at any time.

NOTE 2: The numbers in parentheses in the figure correspond to the timing specified in Table A.7.

Figure A.11 - State transitiondiagram of AC charging control pilot circuit without switch S2

The timing of AC charging control is shown in Table A.7.

Internal use only, not for resale or public post.

Table A.7 - AC charging control timing table

Timing	Timing diagram	State	Condition	Time
1.1 Connection (vehicle equipped with S2 switch)	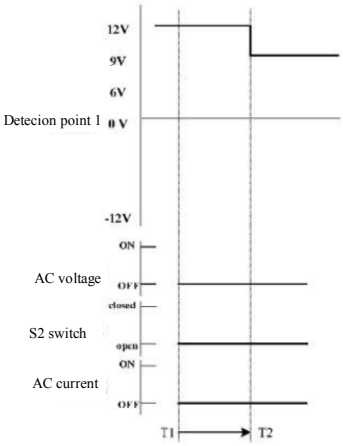 Trigger condition: None	State 1	(1) Electric vehicle not connected,+12 V	(T2-T1), no requirements
		State 1→ State 2	(2) Electric vehicles and power supply equipment are connected through charging cables, +9 V This timing also applies to state 1'→state 2’	
1.2 Connection (vehicle not equipped with S2 switch)	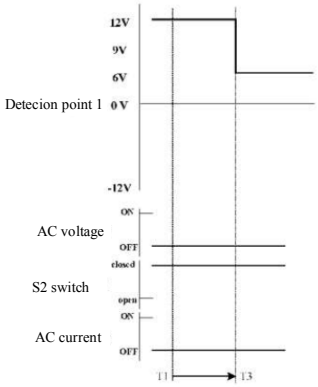 Trigger condition: None	State 1	(1) Electric vehicle not connected,+12 V	(T3-T1)，no requirements
		State 1→ State 3	(3) Electric vehicles and power supply equipment are connected through charging cables, +6 V. This timing occurs in the control pilot circuit of the vehicle not equipped with S2. This timing also applies to states 1'→3'	
2.1 Disconnect in state 2 or state 2 '	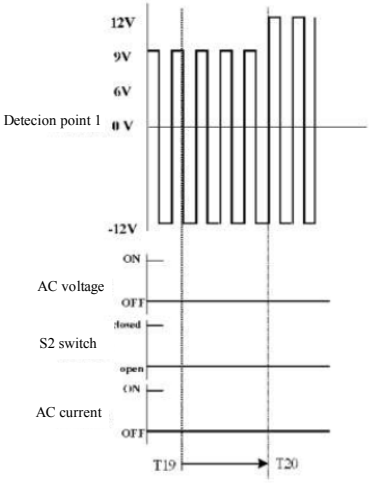 Trigger condition: None	State 2’→State 1’ or State 2→State 1	(19) After the EV plug and socket-outlet is disconnected or the vehicle inlet is disconnected, S1 delays switching to+12 V state, and the state transition is as follows: State 2’→State 1’ or State 2→State 1	(T20-T19)，no requirements
		State 1 or State 1’	(20) electric vehicle is not connected Within 5 seconds after entering state 1 for 100 ms, the locking device of the power supply equipment shall unlock the EV socket-outlet (for case A and B connection). If the locking device is triggered by user authorization, the EV socket-outlet can only be unlocked if both entering state 1 and obtaining user authorization again are met simultaneously	

Internal use only, not for resale or public post.

Table A.7 - AC charging control timing table (continued)

Timing	Timing diagram	State	Condition	Time
2.2 Disconnect during charging process	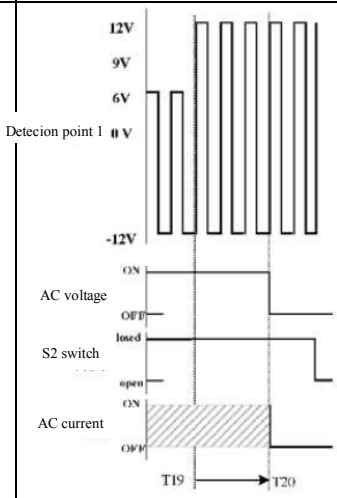 Trigger condition: State 3'→State 1'	State 3'→ State 1'	(19) In the energy transfer stage, when the following faults occur, the power supply equipment shall disconnect the AC power supply circuit: – Open circuit in the control pilot circuit; – EV plug and socket-outletis disconnected with load; – vehicle coupler is disconnected with load. The vehicle shall disconnect its S2 switch (if any) within 3 seconds after a fault occurs	(T20-T19)≤100 ms ≤3 s starting from T19,
		State 3'→ State 1'	(19) In the energy transfer stage, when the following faults occur, the power supply equipment should disconnect the AC power supply circuit: – Open circuit in the control pilot circuit; – Disconnect the EV plug and socket-outlet with load; – vehicle coupler is disconnected with load. The vehicle shall disconnect its S2 switch (if any) within 3 seconds after a fault occurs	(T20-T19)≤100 ms ≤3 s starting from T19,
	Trigger condition: State 3→State 1	State 3'→ State 1' or State 3→ State 1	(20) electric vehicle is not connected Within 5 seconds after entering state 1 for 100 ms, the locking device of the power supply equipment shall unlock the EV socket-outlet (for case A and B connection). If the locking device is triggered by user authorization, the EV socket-outlet can only be unlocked if both entering state 1 and obtaining user authorization again are met simultaneously	
3.1 Charging device can charge (state 2)	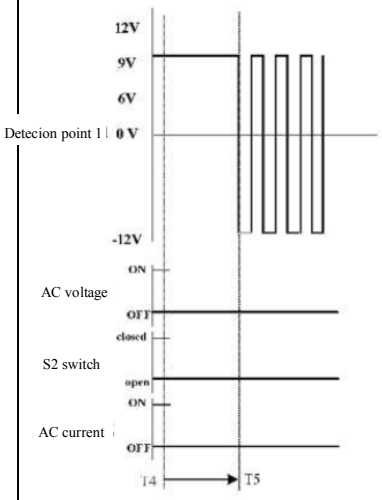 Trigger condition: charging ready	State 2→ State 2'	(5) The power supply device can charge and display its maximum power supply current through PWM duty cycle. At this point, the electric vehicle shall detect a transition from state 2 to state 2'and can be awakened. This timing sequence occurs during the initial stage of the charging process or when the charging process is restarted after being interrupted	(T5-T4)，no requirements

Table A.7 - AC charging control timing table (continued)

Timing	Timing diagram	State	Condition	Time
3.1 Charging device can charge (state 2)	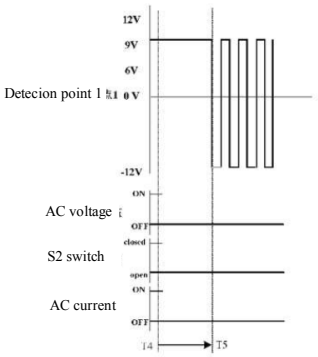 Trigger condition: charging ready	State 2→ State 2’	(5) The power supply device can charge and display its maximum power supply current through PWM duty cycle. At this point, the electric vehicle shall detect a transition from state 2 to state 2'and can be awakened. This timing sequence occurs during the initial stage of the charging process or when the charging process is restarted after being interrupted	(T5-T4)，no requirements
3.2 Charging device can charge (state 3)	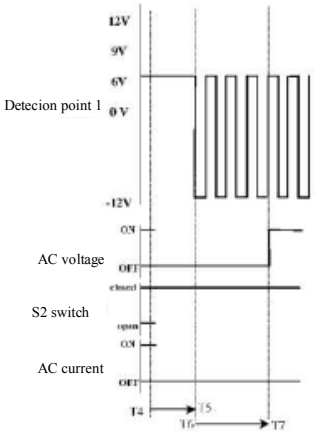 Trigger condition: charging ready	State 3→ State 3’	(5) The power supply device can charge and display its maximum power supply current through PWM duty cycle. At this point, the electric vehicle shall detect a transition from state 3 to state 3'and can be awakened. This timing sequence occurs during the initial stage of the charging process or when the charging process is restarted after being interrupted	(T5-T4)，no requirements
			(6) Electric vehicles can be charged. (7) The power supply equipment closes the AC power supply circuit. If the duty cycle is 5%, the power supply equipment will not close the AC power supply circuit without receiving digital communication	(T6-T5)=0 s (T7-T6)≤3 s
4 Electric vehicle charging ready	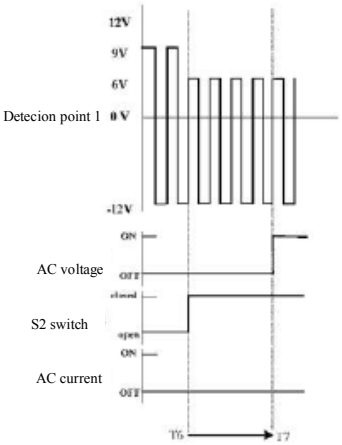 Trigger condition: State 2’→State 3’	State 2’→State 3’	(6) Electric vehicle charging ready (7) The power supply device closes the AC power supply circuit, unless the charging device changes to another charging state (such as state 3) within 3 seconds	(T7-T6)≤3 s
		State 3’	If the duty cycle is 5%, the power supply equipment will not close the AC power supply circuit without receiving digital communication	

Table A.7 - AC charging control timing table (continued)

Timing	Timing diagram	State	Condition	Time
5 EV starts charging	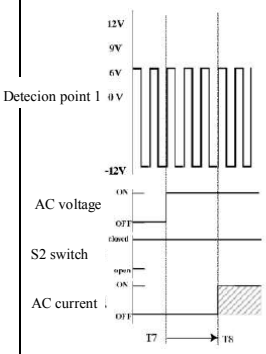 Trigger condition: EV starting charging	State 3’	(8) Electric vehicles starts charging, and the charging current shall not exceed the current value defined by the corresponding duty cycle specified in Table A.3	(T8-T7)，no requirements
6 Power supply equipment adjusts output power during energy transfer stage	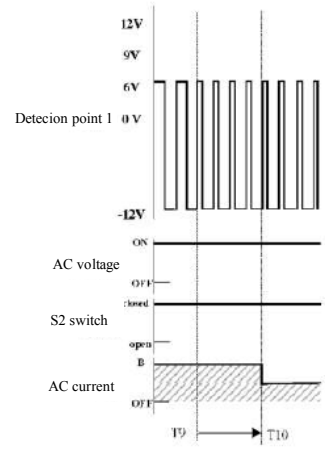 Trigger condition: Adjusting the PWM duty cycle	State 3’	(9) When the load of the supply network changes or the output settings of the power supply equipment are manually changed, the power supply equipment needs to adjust the Ft output power. The power supply equipment can adjust the PWM duty cycle within an effective range within a specified time. In the energy transfer stage, it is allowed to adjust the duty cycle within 5 seconds (T10-T9). The power supply equipment shall not trigger the adjustment of the duty cycle again	Max 10 seconds The time from receiving the duty cycle command from the power supply equipment to responding to the output duty cycle
			(10) The electric vehicle adjusts the charging current after detecting the change of PWM duty cycle, and the adjusted charging current cannot be greater than the maximum allowable charging current displayed by PWM duty cycle	(T10-T9)≤5 s
7 EV stops charging	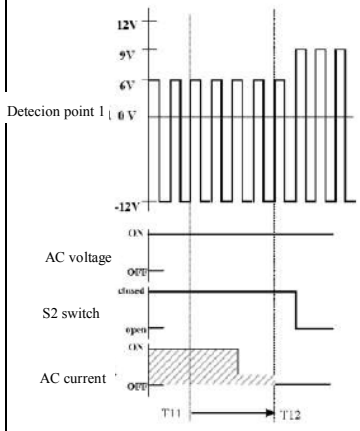 Trigger condition: shutdown or S3 switch disconnected	State 3’	(11) Under normal operating conditions (reaching the charging termination condition set by the electric vehicle or being fully charged), the electric vehicle shall reduce the charging current to the minimum (<1A) before disconnecting S2 When the linkage switch on the vehicle connector is manually pressed, the electric vehicle shall disconnect S2 within 1 second and reduce the charging current to the minimum (<1 A). In a faulty state, the electric vehicle can immediately disconnect S2	(T12-T11)，no requirements Within 1 second from pressing the S3 switch
		State 3’→ State 2’	(12) Electric vehicles can disconnect S2	

Table A.7 - AC charging control timing table (continued)

Timing	Timing diagram	State	Condition	Time
8.1 After S2 is disconnected, the power supply equipment responds (with PWM)	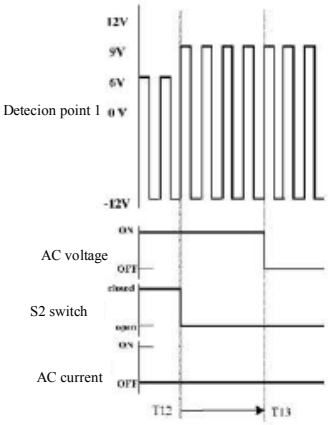 Trigger condition: State 3’→2’	State 2’	(13) When transitioning from state 3'to state 2', the power supply equipment shall disconnect the AC power supply circuit. In abnormal conditions (such as emergency shutdown), the power supply equipment can disconnect the AC power supply circuit with load	(T13-T12)≤100 ms
8.2 After S2 is disconnected, the power supply equipment responds (without PWM)	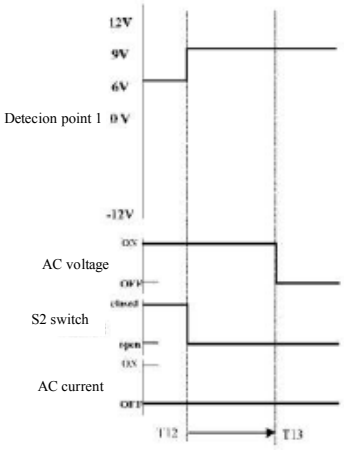 Trigger condition: State 3→2	State 2	(13) When transitioning from state 3 to state 2, the power supply equipment shall disconnect the AC power supply circuit. NOTE: Electric vehicles without S2 switch do not have this state change.	(T13-T12)≤100 ms
9.1 Power supply equipment stops charging and disconnects AC power supply circuit	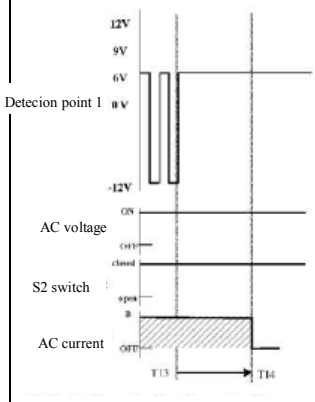 Trigger condition: State 3’→3	State 3’→ State 3	(13) When the charging termination condition set by the power supply equipment is reached or the charging end command is implemented, the device controller can control switch S1 to switch to the+12V connection state and request the vehicle to stop charging	
		State 3	(14) Electric vehicles shall respond to a 100% duty cycle by reducing the charging current to the minimum (<1 A) within 3 seconds, and then disconnect S2	(T14-T13)≤3 s
		When the charging current exceeds the maximum charging current corresponding to PWM specified in Table A.3, the power supply equipment can disconnect the AC power supply circuit		

Internal use only, not for resale or public post.

Table A.7 - AC charging control timing table (continued)

Timing	Timing diagram	State	Condition	Time
9.2 Power supply equipment stops sending PWM when in state 2 '	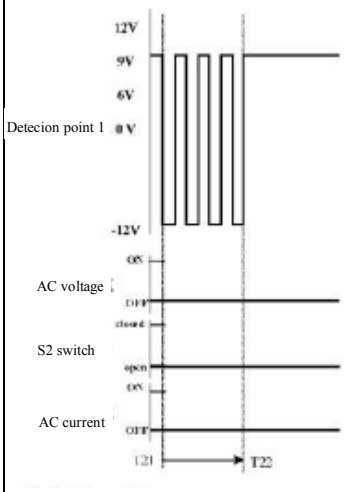 Trigger condition: none	State 2'→ State 2	((22) The power supply equipment stops outputting PWM, and the electric vehicle does not need to make any response. If the timing shown in 3.1 does not appear after 3 seconds, the power supply equipment will continue to maintain S1 connected at+12 V. This timing may cause interference with the electric vehiclestarting charging or pre treatment.	(T22-T21)，no requirements
9.3 Power supply equipment stops sending PWM when in state 1'	Trigger condition: State 2'/3'→State 1'	State 1'→ State 1	(23) The power supply equipment stops outputting PWM. (24) Electric vehicle does not need to make any response	(T24-T23)≤100 ms
10.1 Electric vehicle responds to the state of terminating charging of power supply equipment	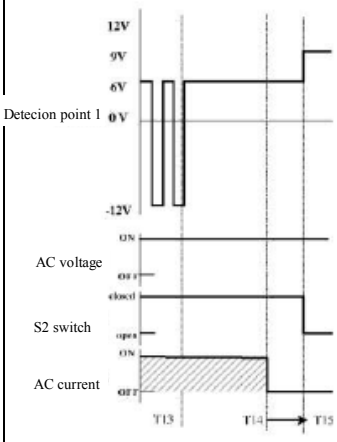 Trigger condition: EV stops charging		This timing occurs after timing 9.1. The electric vehicle responds and reduce the charging current to the minimum (<1 A)	
		State 3→ State 2	(15) Electric vehicles shall disconnect S2	(T15-T14)≤3 s

Table A.7

Timing	Timing diagram	State	Condition	Time
10.2 Electric vehicle cannot respond to the state of terminating charging of power supply equipment	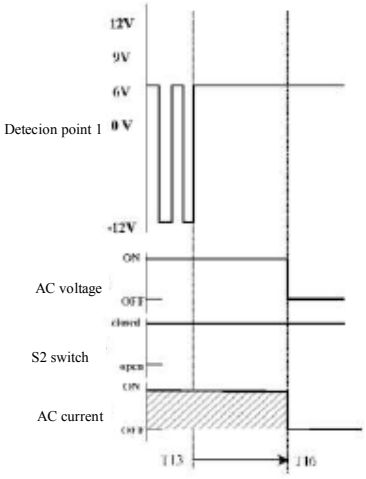 Trigger condition: State 3'→ State3		This timing occurs after timing 9.1, but the electric vehicle cannot respond and cannot stop chargingv	
		State3	(16) The power supply equipment can disconnect the AC power supply circuit with load	(T16-T13)≥6 s
11 Electric vehicle wakes-up digital communication mode of power supply equipment	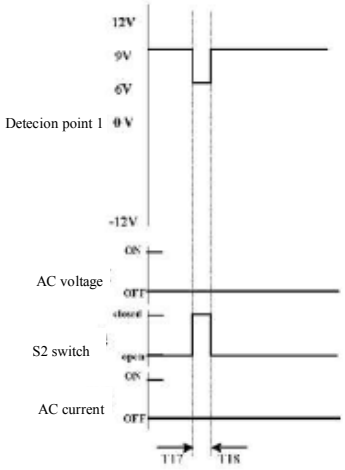	State2(2')→ State3(3)'→ State2(2')	(17, 18) This timing is optional for digital communication. The shutdown of electric vehicle control S2 can be used to wake up the digital communication mode of the power supply equipment. Electric vehicles shall not be charged during this timing period	200 ms ≤(T18-T17)≤ 3 s
12 Any other state enters an abnormal state	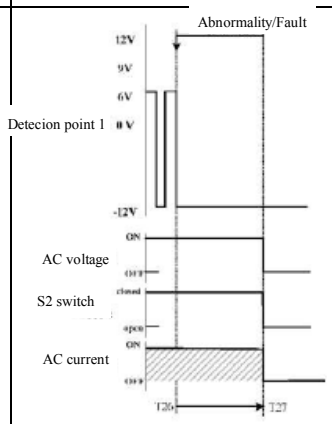 Trigger condition: any state→ State0	State xx→ State0	If any other state enters an abnormal state, the power supply equipment shall disconnect the AC power supply circuit. Electric vehicle opens S2 (if any). For case A or B connecting, the power supply device can be unlocked after cutting off the AC power supply circuit for 100 ms (if any)	Max. 100ms Max 3s

Annex B
(normative)
DC charging control pilot circuit and control principle using the charging connection device specified in GB/T 20234.3

B.1 General rules

This Annex applies to DC power supply equipment (i.e. conductive non on-board chargers, hereinafter referred to as "chargers") and electric vehicles using the charging connection device of GB/T 20234.3-2023. The communication protocol between the charger and the electric vehicle shall comply with the provisions of Class A systems in GB/T 27930-2023.

B.2 DC charging safety protection system

The schematic diagram of the basic scheme of the DC charging safety protection system is shown in Figure B.1. The control power supply of the charger controls the low-voltage auxiliary power supply circuit [rated voltage: (12 ± 1.2) V, rated current: not more than 10 A]. The charger shall have current anti backflow and discharge functions, as well as insulation monitoring devices (IMD). The relief circuit and insulation detection circuit shall have switching function control devices, and the RCD installation requirements shall comply with 11.3.2. During the entire charging process, the device controller shall be able to monitor the status of DC contactors C1 and C2, switches S3 and S4, and control their open/close; The vehicle controller shall be able to monitor the state of the vehicle disconnect devices C5 and C6, and control their open/close.

The vehicle controller can be configured with a low-voltage auxiliary power supply circuit detection function. If the electric vehicle provides its own low-voltage auxiliary power supply, it shall be sepearted from the low-voltage auxiliary power supply circuit of the charger, and the low-voltage auxiliary power supply A+and A- of the vehicle inlet shall not have voltage output.

The low-voltage auxiliary power supply circuit between the A and B sides of the charger shall have galvanic seperation. The installation requirements for chargers below 20 kW shall also comply with relevant product standards.

Internal use only, not for resale or public post.

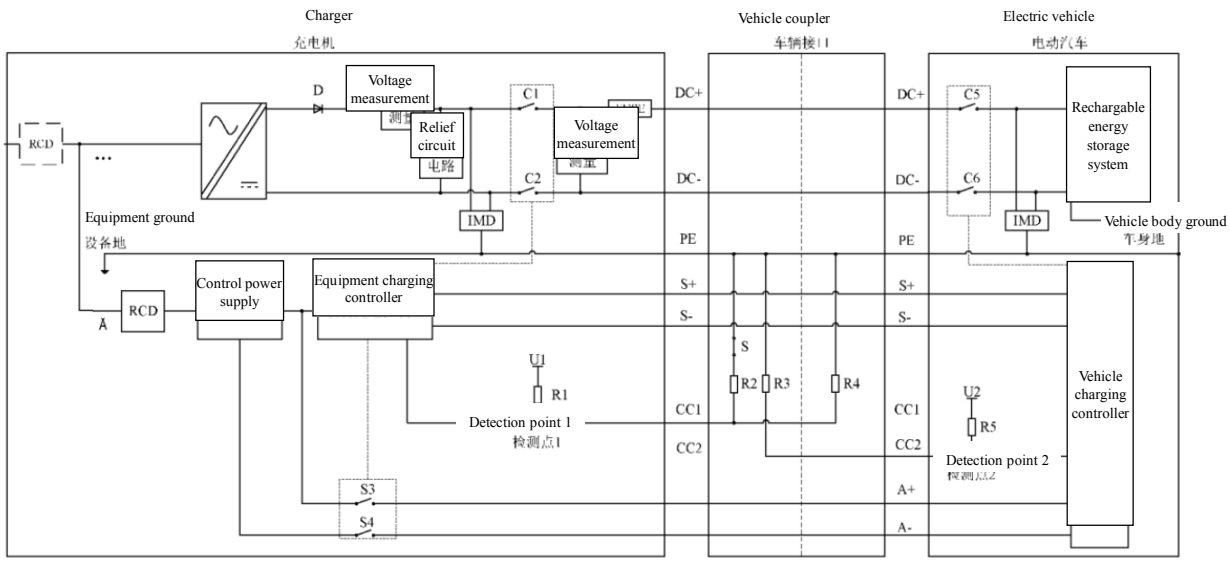

Key

Cl, C2 - DC power supply circuit contactor inside the charger;

D1 - Anti backflow current diode, which can be replaced by other measures;

U1 - Pull-up voltage of control pilotinside the charger;

R1 - Resistance of the control pilot circuit inside the charger;

S3, S4 - Switch of low voltage auxiliary power supply circuit inside the charger;

S - Normally closed switch inside the vehicle connector;

R2, R3 - Resistance of the control pilot circuit inside the vehicle connector;

R4 - Resistance of the control pilot circuit inside the vehicle inlet (or inside the vehicle);

C5, C6 - Vehicle disconnection device;

U2 - Pull-up voltage of control pilotinside the vehicle;

R5 - Resistance of the control pilot circuit inside the vehicle.

Diode D1 is suitable for preventing reverse current during pre charging and can be integrated into the charger.

The vehicle controller can be integrated into the battery management system.

The charger can measures the current of the DC- circuit.

FUSE is used to void dangerous energy generated by short circuits on the vehicle battery side of circuit inside the charger, can also install in the DC circuit of the charger, vehicle connector DC+circuit, and DC circuit to a.

NOTE The types of AC supply network inputs include but are not limited to single-phase, three-phase, and different wiring forms.

Figure B.1 Principle diagram of DC charging safety protection system (AC power supply)

B.3 Parameters of control pilot circuit

The parameter values of the DC charging control pilot circuit are shown in Table B.1.

Table B.1 - Parameters of DCcharging control pilot circuit

Object	Parameter[a]	Symbol	Unit	Nominal value	Max. value	Min. value

Charger	R1equivalent resistance	R1	Ω	1000	1030	970
	Pull-up voltage	U1	V	12	12.6	11.4
	Voltage at dection point 1	U1a	V	12	12.8	11.2
		U1b	V	6	6.8	5.2
		U1c	V	4	4.8	3.2
Vehicle conenctor	R2 equivalent resistance	R2	Ω	1000	1030	970
	R3 equivalent resistance	R3	Ω	1000	1030	970
Vehicle inlet	R4 equivalent resistance	R4	Ω	1000	1030	970
EV	R5 equivalent resistance	R5	Ω	1000	1030	970
	Pull-up voltage	U2[b]	V	12	12.6	11.4
	Voltage at dection point 2	U2a[h]	V	12	12.8	11.2
		U2b[b]	V	6	6.8	5.2
[a]Must maintain an accuracy range under both environmental conditions and within its service life. [b]Can be defined by the vehicle manufacturer, the pull-up voltage U2 shall not exceed 28 V.						

B.4 Charging control process

B.4.1 Vehicle connector and vehicle inletplugged: make the electric vehicle in a non drivable state

When the vehicle coupler is fully connected, i.e. the CC2 circuit is connected (the voltage at detection point 2 is within the U2b range), the electric vehicle shall be in a non drivable state.

After the vehicle connector is connected to the vehicle inlet, the electric vehicle can automatically start a certain triggering condition (such as opening the charging port cover, connecting the vehicle connector to the vehicle inlet, or setting the function trigger of the electric vehicle's charging button, switch, etc.), and put the electric vehicle in a non drivable state through locking devices or other control measures.

B.4.2 Vehicle coupler connection confirmation

After the operator sets the charging device for the charger, the device controller determines whether the vehicle connector and inlet are fully connected by measuring the voltage value of detection point 1. When the voltage value of detection point 1 is 4 V, it is judged that the vehicle coupler is fully connected. After the vehicle coupler is fully connected and the electronic lock is locked, close S3 and S4 to conduct the low-voltage auxiliary power supply circuit, enter the handshake start stage and begin to periodically send communication handshake messages.

Internal use only, not for resale or public post.

The vehicle controller determines whether the vehicle connector and inlet are fully connected by measuring the voltage value at detection point 2. When the voltage value at detection point 2 is half of the pull-up voltage U2, it indicates that the vehicle coupler is fully connected. After receiving the communication handshake message sent by the device controller, the vehicle controller begins to periodically send the communication handshake message.

B.4.3 Self check of charger

Before insulation self check, the charger shall check that the absolute value of the voltage on the outside of C1 and C2 shall not exceed 60 V DC before closing them. Confirm that the voltage on the outside of the vehicle power supply circuit is normal and that the insulation monitoring at the vehicle end allows the total voltage to be higher than the minimum output voltage of the charger. Before the energy transfer stage, the charger shall perform DC power supply circuit C1 and C2 contact adhesion detection, short circuit detection, and insulation monitoring inside the charger (including charging cables). During insulation monitoring, the charger shall close C1 and C2, and the output cable insulation monitoring voltage shall be the smaller of the total allowable voltage for vehicle end insulation monitoring and the highest charging voltage of the charger; After the insulation monitoring is completed, the IMD is physically separated from the strong current circuit and connected to the relief circuit to discharge the charging output voltage. After the discharge is completed, the charger shall separate the relief circuit from the strong current circuit, and disconnect C1 and C2when the voltage between the DC+ and DC- in the DC power supply circuit drops below 60 V DC.

B.4.4 Charging ready

During the configuration stage of the vehicle controller and device controller, the vehicle controller shall be able to inform the charger of the charging parameters at position A (as shown in Figure 7), including the maximum allowable charging current, maximum allowable total charging voltage, and present voltage measurement values at the vehicle coupler. When the vehicle controller receives the maximum output capacity parameter of the charger, it determines whether charging can be carried out; When the vehicle is allowed to charge, close C5 and C6 to make the vehicle power supply circuit conductive. The device controller shall be able to configure the charging capacity based on the received vehicle charging parameters and inform the electric vehicle of the maximum output capacity parameters at position A (as shown in Figure 7), including the maximum/minimum charging voltage and maximum/minimum charging current of the charger. When the device controller detects that the current vehicle power supply circuit voltage is normal (confirm the voltage at the outer end of the contactor: (1) the error range of the current voltage measurement value at the vehicle coupler in the communication message is ≤± 5%, and (2) it is greater than the minimum charging voltage of the charger and less than the maximum charging voltage of the charger), adjust the output voltage to be 1-10 V DC lower than the current battery side voltage, and then close C1 and C2 to make the DC power supply circuit conductive.

NOTE The selection of the output voltage value of the charger during pre charging needs to consider its

Internal use only, not for resale or public post.

output setting error and measurement error.

B.4.5 Energy transfer

In the energy transfer stage, the vehicle controller sends real-time vehicle coupler charging target parameters to the device controller. When the device controller adjusts the charging current to decrease: ΔI≤20 A, adjusting the charging current to be consistent with the command value within 1 second at most; When ΔI>20 A, adjusting the charging current to be consistent with the command value within ΔI/dlmin s at most (dlmin is the current adjustment rate, at least 20 A/s). The device controller adjusts the charging voltage and current in real-time based on the charging target parameters of the vehicle coupler. In addition, the vehicle controller and device controller also send their respective state information to each other. In the energy transfer stage, the vehicle end shall be able to detect broken pin of PE.

In the energy transfer stage, both the charger and electric vehicle can initiate a pause. At the beginning of the pause, the charger shall confirm that the charging current drops to 5A or below before disconnecting contactors C1 and C2, and put in a relief circuit to reduce the front-end voltage to below 60V DC, and the electronic lock remains reliably locked. During the pause process, the electric vehicle shall maintain C5 and C6 in a closed state and continuously test the voltage at detection point 2. When the charger detects that C5 and C6 are disconnected during the pause process, it periodically sends a "charger terminates charging message" and is not allowed to enter the energy transfer stage again. When the pause ends and both parties are ready to charge, the charger shall adjust the internal output voltage to the current voltage of the vehicle coupler minus 1 V to 10 V DC, then close C1 and C2 to make the DC power supply circuit conductive. At this time, both parties shall enter the energy transfer stage again. The time from when an electric vehicle or charger sends a pause request to when it resumes shall not exceed 10 minutes.

B.4.6 Charging shutdown under normal conditions

After reaching the end of vehicle charging condition or receiving the "charger terminates charging message", the vehicle controller starts to periodically send the "vehicle terminates charging message". After confirming that the charging current decreases to 5 A or below, disconnect C5 and C6. When the charging end condition set by the operator is reached or the "vehicle terminates charging message" is received, the equipment controller sends a "charger terminates charging message" periodically and controls the charger to stop charging, reduces the charging current at a rate of not less than 100 A/s (for output current ≥100 A) or reduces the charging current to 5 A or less within 1 second (for output current<100 A), then disconnects Cl and C2, and then put into the relief circuit. S3 and S4 can only be disconnected after the charger has sent the statistical message and received the vehicle statistical message.

When the operator implements the stop charging command, the device controller begins to periodically send a "charger terminates charging message" and controls the charger to stop charging, reduces the charging current at a rate of not less than 100 A/s

Internal use only, not for resale or public post.

(for output current ≥100 A) or reduces the charging current to 5 A or less within 1 second (for output current<100 A), then disconnects C1 and C2, and then put into the relief circuit. S3 and S4 can only be disconnected after the charger has sent the statistical message and received the vehicle statistical message.

The vehicle coupler voltage shall drop below 60 V DC before the electronic lock is unlocked.

B.4.7 Charging shutdown under abnormal conditions

B.4.7.1 In the energy transfer stage, if the charger fails to continue charging, it periodicallysends a "charger terminates charging message" to the vehicle, and controls the charger to stop charging, shall disconnect C1, C2 within 100 ms. While S3 and S4 shall be disconnected only after the charger has sent the statistical message and received the vehicle statistical message.

B.4.7.2 In the energy transfer stage, if the vehicle experiences a fault that prevents it from continuing to charge, it sends a "vehicle charging suspension message" to the charger, disconnects C5 and C6 within 300 ms (depending on the severity of the fault).

B.4.7.3 During the charging process, the vehicle controller shall detect the voltage at detection point 2. If it is determined that the vehicle coupler changes from fully connected to unreliable connection (exceeding the U2b voltage range by more than ± 5%), it sends a "vehicle terminates charging message" to the charger and disconnects C5 and C6 within 300 ms (depending on the severity of the fault).

B.4.7.4 During the charging process, if there is a communication timeout, the device controller and vehicle controller shall disconnect C1 and C2 within 5 seconds and C5 and C6 within 10 seconds after reaching the corresponding message timeout time specified in Annex A of GB/T 27930-2023. When the message that needs to be reconnected exceeds the time limit, the charger shall also confirm within 10 seconds after the message timeout that the absolute values of the outer voltage of C1 and C2 are less than 60 V DC before reconnecting.

NOTEAnnex A of GB/T 27930_2023 defines the message that needs to be reconnected when the charger receives a timeout.

B.4.7.5 During the charging process, the device controller detects the voltage at detection point 1. If the vehicle coupler changes from fully connected to unreliable connection (not within the U1c voltage range), it periodically sends a "charger terminates charging message" to the vehicle and controls the charger to stop charging. Shall reduce the output current to 5 A or less within 50 ms, and disconnect Cl and C2 within 100 ms. S3 and S4 can only be disconnected after the charger has sent the statistical message and received the vehicle statistical message.

NOTE Unreliable connections include but are not limited to situations where switch S changes from closed to open, vehicle couplers change from fully connected to disconnected, and electrical continuity of protective earthing conductors is lost.

Internal use only, not for resale or public post.

B.4.7.6 In the energy transfer stage, if the charger detects that the charging voltage at the vehicle coupler exceeds the maximum allowable total charging voltage of the vehicle+15 V, it periodically sends a "charger stop charging message" to the vehicle and controls the charger to stop charging, and shall disconnect C1, C2 within 1 second. S3 and S4 can be disconnected only after the charger has sent the statistical message and received the vehicle statistical message.

NOTE If the charger ends charging due to serious fault, restarting the charging requires the operator to perform a complete charging start operation.

B.4.7.7 During the self check process of the charger, if the charger detects insulation faults, short circuits, or abnormal voltage in the vehicle side charging circuit of the DC power supply circuit, it periodically sends a "charger suspension charging message" to the vehicle and controls the charger to stop the insulation self check process. The vehicle coupler voltage shall drop to below 60 V DC and disconnect C1 and C2, S3 and S4 before unlocking the electronic lock.

B.4.7.8 During the charging ready process, if the charger detects that the current voltage at the vehicle coupler is abnormal (the error range between the measured voltage at the vehicle coupler in the communication message is greater than 5% or not within the normal charging range of the charger), it periodically sends a "charger terminates charging message" to the vehicle cycle and controls the charger to stop the pre charging process, The vehicle coupler voltage shall drop below 60 V DC and disconnect C1 and C2, S3 and S40 before unlocking the electronic lock

B.4.7.9 In the energy transfer stage, if the electronic lock is not expected to lock or is not reliably locked, the charger shall periodically send a "charger terminates charging message" to the vehicle and control the charger to stop charging, and shall disconnect C1, C2within 1 second. S3, and S4 can only be disconnected after the charger has sent the statistical message and received the vehicle statistical message.

B.4.7.10 When there is a load dump (such as load rejection) due to a fault in the energy transfer stage, the instantaneous output voltage value shall not exceed the larger value of position A (see Figure 7) (110% of the charging target voltage) and (charging target voltage+50 V DC), and there shall be no dangerous situation.

NOTE The transient voltage, that may occur during load dump and last up to 10 ms, is ignored.

The requirements for the charging shutdown of chargers and electric vehicles under abnormal conditions shall comply with the provisions of Table B.2 and Table B.3, and the fault items are not limited to the ones listed in the table.

Table B.2 - Charger shutdown requirements

Fault item		Shutdown time [a] (Disconnect C1 and C2)	Unlocking conditions
Charging process	Communication timeout (with vehicle)	≤5 s[b]	Vehicle coupler voltage drops below 60 V DC

	Voltage abnormality of detection point 1	≤100 ms[c]	
Charger self check	Insulation fault	—	
	Contactor adhesion	—	
	DC charging circuit short circuit	—	
Charging ready	Vehicle coupler voltage abnormal	—	
Energy transfer	Unable to continue charging (on the charger side)	≤100 ms	Vehicle coupler voltage drops below 60 V DC
	The output voltage exceeds the maximum allowable total charging voltage of the vehicle+15 V	≤1 s	
	Electronic lock not locked as expected or not reliably locked	≤1 s	—
	Load dump	—	Vehicle coupler voltage drops below 60 V DC

[a]Timing starts from the occurrence of the fault.
[b] Timing starts fromreaching the corresponding message timeout time specified in Annex A of GB/T 27930-2023.
[c]When there is an abnormality in the energy transfer stage, it shall also meet the requirement of reducing output current to 5A and lower in 50 ms.

Table B.3 - Vehicle shutdown requirements

Fault item		Shutdown time [a] (Disconnect C1 and C2)
Charging process	Communication timeout (with vehicle)	≤10s[b]
	Voltage abnormality of detection point 2	≤300 ms[c]
Energy transfer	Unable to continue charging (on the vehicle side)	≤300 ms[c]

[a]Timing starts from the occurrence of the fault.
[b] Timing starts from reaching the corresponding message timeout time specified in Annex A of GB/T 27930-2023.
[c]Determined by the severity of the fault by the vehicle.

B.5 Charging circuit principles

B.5.1 IMD circuits are installed on both the charger side and the vehicle side to detect symmetrical and asymmetrical insulation faults in the DC power supply circuit between DC+ and PE, as well as between DC- and PE. During the time from the vehicle coupler connection to the closing of C5 and C6, the internal insulation monitoring (including

charging cables) shall be completed by the charger; The insulation monitoring of the entire charging system shall be completed by the electric vehicle in the energy transfer stageafter the IMD circuit at the charging end is disconnected from the DC power supply circuit through a switch and C5 and C6 are closed. For DC power supply circuit insulation resistance between DC+ and PE, and the insulation resistance between DC- and PE (taking the smaller value R), when R>500 Ω/V, itis considered safe; when 100Ω/V<R≤500 Ω/V,should perform insulation abnormality alarm, but shall charge normally; when R≤100 Ω/V, it is considered an insulation fault and shall stop charging.

NOTEIn the energy transfer stage, when an electric vehicle detects insulation abnormalities, the data exchange can be found in GB/T 27930-2023.

B.5.2 After the IMD detection of the charger, the charging voltage shall be relieved in a timely manner to avoid voltage shocks to the battery load in the energy transfer stage. After the charging is completed, the charger shall relieve the charging voltage (C1 and C2 front-end voltage) in a timely manner to avoid causing electric shock injury to the operator. The parameter selection of the relief circuit shall ensure that the vehicle coupler voltage drops below 60 V DC within 1 second after the charging connector is disconnected. After the discharge is completed, the charger shall ensure that the relief circuit is separated from the DC power supply circuit.

B.5.3 When the DC power supply circuit or control circuit loses power due to power outage or other reasons, the charger shall disconnect C1 and C2 within 1 second or reduce the vehicle coupler voltage to below 60 V DC through the relief circuit within 1 second.

B.5.4 The charger and/or cable assembly shall have a protective measure, such as using current limiting fuses or other devices to protect the charging cable from overload current and short circuit effects. The protective measures shall be able to withstand and protect the charging cable from the impact of a DC output short-circuit current of up to 30 kA that lasts for 2 ms at the vehicle connector. The overload current protection device shall respond quickly to reduce the risk of C5 and C6 adhesion caused by short circuit current, as well as the arc risk at the contact area of the vehicle connector/inlet.

B.5.5 The X/Y capacitors of 5.5 chargers and electric vehicles shall comply with the provisions of C.7.8.

B.6 Control timing of charging connection

A typical DC charging connection process and control timing (normal charging end) are shown in Figure B.2.

Internal use only, not for resale or public post.

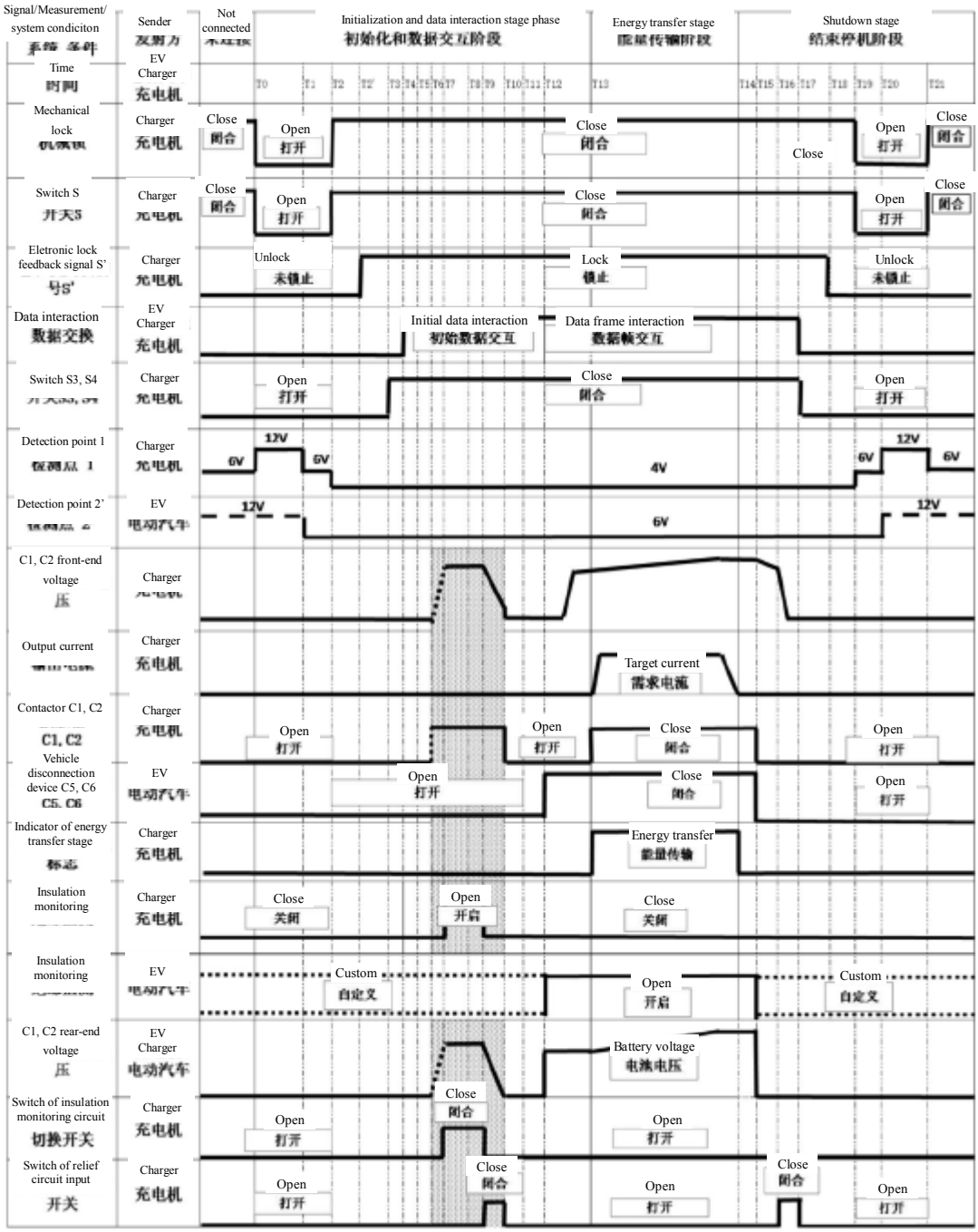

Key

Conduct adhesive, short circuit, and insulation tests in this stage (in no order)

Dashed lines indicate customization

S3 and S4 can only be disconnected after the charger has sent the statistical message and received the vehicle statistical message.

After the end of charging, C1 and C2 are disconnected, the front-end voltage of the charger C1 and C2 is less than 60 V within 1 second; And after the voltage at detection point 1 changes from 12 V to 6 V, the relief circuitshall remain disconnected.

NOTE 1: Without schedule, T0-T7 is less than 10 minutes and T5-T6 is less than 30 seconds; With schedule, no time limit for T0-T7 and T5-T6.

NOTE 2: T4-T5 is the initial data exchange, which completes the communication version, vehicle end insulation monitoring, allowable total voltage and other data exchange.

[a] Defiend by the vehicle manufacturer. In the schematic diagram, taking pulling voltage U2 is 12 V as an example.

Figure B.2 – Control timing diagram of DC charging connection

The description of control timing of DC charging connection is shown in Table B.4.

Table B.4 - Control timing table of DC charging

T0	Vehicle coupler is not connected. Press the vehicle connector switch S and make it open
T1	Vehicle coupler not fully connected; Keep switch S open; Insert vehicle connector into vehicle inlet
T2	Vehicle coupler connected. After the vehicle connectorand vehicle inlet plugged, release the vehicle connector switch S. Keep the switch S normally closed. At this time the vehicle coupler is fully connected
T2’	Electronic lock feedbacks reliable locking signal
T0→T2	Process of vehicle connector and inlet plugged. The voltage at detection point 1 is from 6 V→12 V→ 6 V→4 V，andthe voltage at detection point 2 is from pull-up voltage U2→ half of U2
T3	Charger closes S3 and S4, and makes the low-voltage auxiliary power supply circuit conductive
T4	Charger starts handshake message
T4→T5	Initial data exchange. Charger obtains communication version, vehicle end insulation monitoring allows total voltage, etc. The vehicle controller determines whether the vehicle coupler is fully connected by measuring the voltage value at detection point 2. If the voltage value of detection point 2 is half of the pull-up voltage U2, the vehicle controller waits for the charger to send a handshake message and periodically send a handshake message after receiving the handshake message sent by the charger
T5→T6→T7-→T8	Before insulation monitoring, the charger first checks that the absolute value of the external voltage of Cl and C2 shall not exceed 60 V DC before C1 and C2 are closed, and confirms that the vehicle power supply circuit voltage is normal and that the vehicle end insulation monitoring allows the total voltage to be higher than the minimum charging voltage of the charger. Before the energy transfer stage, the charger shall condct DC power supply circuit DC contactor contact adhesion detection, short circuit detection, and insulation monitoring. During insulation monitoring, the charger shall close C1 and C2, and the output cable insulation monitoring voltage shall be the smaller of the total allowable voltage for vehicle end insulation monitoring and the highest charging voltage of the charger
T9	Insulation monitoring completed, disconnect the insulation detection circuit switch
T9	Release circuit switch closed, start relieve
T10	Residual voltage relief completed. Relief circuit switch disconnected. When the equipment controller confirms that the output voltage drops below 60VDC, disconnects C1 and C2
T6→T10	After receiving the total allowed voltage of the vehicle end insulation monitoring, the charger is responsible for monitoring the insulation of the battery (including charging cables) inside the charger. For the DC power supply circuit insulation resistance between DC+ and PE, andinsulation resistance between DC- and PE (taking the smaller value R), when R>500 Ω/V, it is considered safe; When 100 Ω/V<R<500Ω/V, should perform insulation abnormality alarm, but shall charge normal; when R<100 Ω/V, it is considered an insulation fault and shall stop charging
T11	The charger starts sending communication identification messages periodically. The vehicle controller waits for the charger to send a communication identification message, and after receiving the identification message sent by the charger, it periodically sends the identification message

Internal use only, not for resale or public post. www.gbstandards.org

T12	After the vehicle charging is ready, the vehicle controller closes C5 and C6 to make the vehicle power supply circuit conductive. Electric vehicle is responsible for insulation monitoring of the entire charging system
T13	The device controller detects that the vehicle couplerpresent voltage is normal (greater than the minimum charging voltage of the charger and less than the maximum charging voltage of the charger). The charger shall adjust the front-end output voltage to vehicle couplerpresent voltage minus 1 V ~10 V DC, then close C1 and C2 to make the DC power supply circuit conductive. Entering the energy transfer stage. The charger adjusts the charging voltage and current based on the real-time charging target parameters sent by the vehicle controller. exchanges charging states with each other

Internal use only, not for resale or public post.

Table B.4 - DC charging control timing table (continued)

T12→T13	The output voltage of the charger is the pre charging voltage. The pre charging voltage is the vehicle coupler present voltage minus 1 V to 10 V DC
T14	When the charging end condition is reached, the vehicle controller starts sending a "vehicle terminates charging message", and the device controller periodically sends a "vehicle terminates charging message" and controls the charger to stop charging. Charger stops outputting and the output current drops to 5 A or less
T15	Electric vehicle opens C5 and C6; charger opens C1 and C2. Electric vehicle stop insulation monitoring
T12→T15	In the energy transfer stage after the closing of C5 and C6, the electric vehicle is responsible for insulation monitoring of the entire charging system. For DC power supply circuit insulation resistance between DC+ and PE, and insulation resistance between DC- and PE (the smaller value R), when R>500 Ω/V, it is considered safe; when 100 Ω/V<R≤500 Ω/V, should perform insulation abnormality alarm, but shall charging normally; when R<100 Ω/V, it is considered an insulation fault, and shall stop charging
T16	Charger closes the relief circuit switch to relieve the charging voltage at the front end, avoiding electric shock injury to operators
T17	The output voltage of the charger drops below 60 V DC and disconnect the relief circuit switch; Charger opens S3 and S4; Both parties stop data exchange
T18	Electronic lock feedback unlocking signal
T19	Press the vehicle connector switch S, open switch S
T20	Keep switch S open, unplug the vehicle connector from the vehicle inlet
T21	When the vehicle connector is completely separated from the vehicle inlet, release the switch S
T19→T21	During the disconnection process between the vehicle connector and the vehicle inlet, the voltage at detection point 1 changes 4 V→6 V→12 V→6 V, and the voltage at detection point 2 changes from half of the pull-up voltage U2→U2

Internal use only, not for resale or public post.

Annex C
(normative)
DC charging control pilot circuit and control principle using the charging connection device specified in GB/T 20234.4

C.1 General

This Annex applies to DC power supply equipment (i.e. conductive non on-board chargers, hereinafter referred to as "chargers") and electric vehicles using the charging connection device of GB/T 20234.4. The communication protocol between the charger and the electric vehicle shall comply with the provisions of Class B systems in GB/T 27930-2023. This Annex only applies to unidirectional charging.

C.2 DC charging safety protection system

The schematic diagram of the basic scheme of a DC charging safety protection system that does not use a vehicle adaptor and does not have charging compatibility is shown in Figure C.1. The basic scheme for using an adaptor and having a DC charging safety protection system compatible with Annex B is shown in Annex G.

The charger shall have diode D (supporting unidirectional charging and current anti backflow) or bypass R_{pre} and S_{pre} combination (supporting unidirectional and bidirectional charging), discharge function, and insulation monitoring device (IMD). The relief circuit and insulation detection circuit shall have switching function, and the installation requirements of RCD shall comply with 11.3.2. The cable assembly thermal management system is an optional feature. During the entire charging process, the device controller shall be able to monitor the state of DC contactors C1 and C2, switch S0 [optional, closed after authentication (such as card swiping); if not available, it is equivalent to a normally closed state. Taking S0 is normally closed as an example in this Annex], and switch S1 state (initialization state is open); The vehicle controller shall be able to monitor the state of the vehicle disconnect devices C5 and C6, switch S2 (initialization status is disconnected), S2'(optional, if configured, initialization state is disconnected), and Sv state (initialization state is customized by the manufacturer). Switch S1 and S2 serve as hardware switches to switch between allowed and disallowed charging states (whether energy transfer conditions are met).

NOTE: The requirements forthermal management system of cable assemblyare shown in Clause 7 of GB/T 20234.4-2023.

There shall be galvanicseperation between side A and side B of the charger.

Internal use only, not for resale or public post.

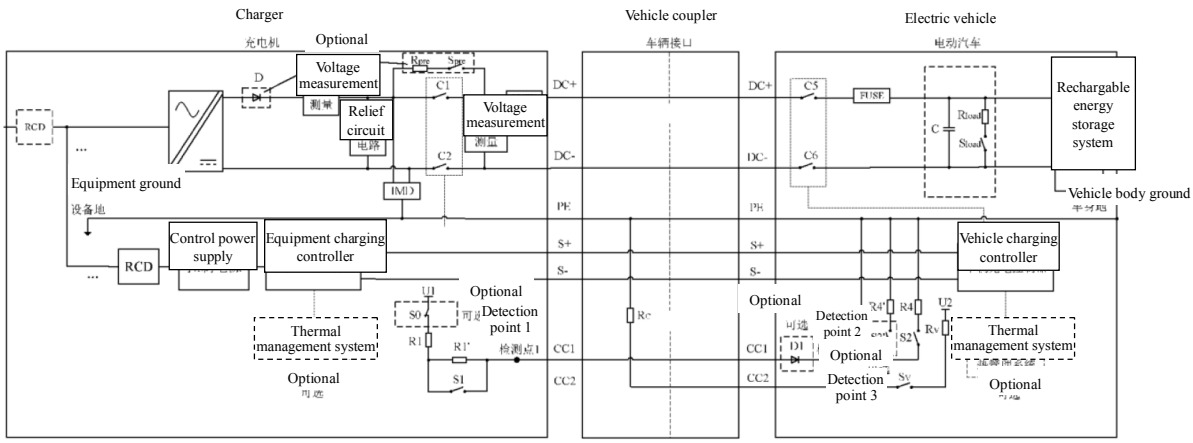

Key

C1, C2	- DC power supply circuit contactors inside the charger;
D	- Anti backflow current diode, which can be replaced by other measures;
Rpre, Spre	- Circuit inside the charger, used for pre charging
U1	-Pull-up voltage of control pilot inside the charger;
R1, R1’	- Resistance of control pilot circuit inside the charger;
S0	-Switch of control pilot circuit inside the charger, optional, closed after authentication (such as card swiping); If not, it is equivalent to a normally closed state;
S1	- Switch of control pilot circuit inside the charger;
Rc	- Resistance ofcontrol pilot circuit inside thevehicle connector, used for hardware version coding;
C5, C6	- Vehicle disconnection device;
C. Rload and Sload	-Circuits inside the vehicle, such as load (air conditioning), battery heating, etc., defined by the electric vehicle manufacturer;
R3’, R4, R4’, Rv	- Resistance of control pilot circuit inside the vehicle;
D1	- Diode of control pilot circuit inside the vehicle, optional, suitable for electric vehicles compatible with Europe/USA chargers;
S2, S2'(optional), Sv	- Switch of control pilot circuit inside the vehicle.

Diode D is suitable for preventing reverse current during pre charging and can be integrated into the charger.

The vehicle controller can be integrated into the battery management system;

The charger can measure the current of the DC- circuit;

FUSE is used to avoid dangerous energy generated by short circuits on the vehicle battery side in the circuit inside the charger. It can also be installed in the DC circuit of the charger, the DC+circuit and the DC- circuitof the vehicle connector;

Switch S2'is mainly used for charging compatibility between electric vehicles and chargers in Japan and/or Europ/USA, as shown in Annex H.

NOTE 1: The types of AC power supply input include but are not limited to single-phase, three-phase, and different wiring forms.

NOTE 2: The initial state of the switches Sv and S2’ inside the vehicle in the figure is normally open.

Figure C.1 - Principle diagram of DC charging safety protection system (AC

power supply)

C.3 Parameters of control pilot circuit

The parameter values of the DC charging control pilot circuit are shown in Table C.1.

Table C.1 - Parameters of DC charging control pilot circuit

Object	Parameter[a]	Symbol	Unit	Nominal value [b]	Max. value	Min. value
Charging station	R1equivalent resistance	R1	n	1000	1010	990
	R1'equivalent resistance	R1'	n	10000	10100	9900
	Pull-up voltage	U1	V	12	12.6	11.4
	S0 switch [c]	S	—	Normally open	—	—
	S1 switch	S1		Normally open	—	—
Vehicle connector	Rcequivalent resistance	Rc	n	1000	1010	990
EV	R3'equivalent resistance	R3'	n	100 000	101 000	99 000
	R4equivalent resistance	R4	n	1 300	1 313	1 287
	R4'equivalent resistance	R4'	n	2 740	2 767	2 713
	Rvequivalent resistance	Rv	n	1 000	1 010	990
	Pull-up voltage [d]	U2	V	12	12.6	11.4
	S2 switch	S2		Normally open	—	—
	S2' switch [e]	S2'		Normally open		
	Sv switch[f]	Sv		Normally open/ Normally close		
	Equivalent diode voltage drop[g] (2.75 mA~10 mA, -40 ℃~+ 85℃)	Vd1	V	0.70	0.85	0.55

[a] Must maintain an accuracy range under both environmental conditions and within its service life. The resistance accuracy shall not exceed ± 1%, and the power supply accuracy shall not exceed ± 5%.

[b] Switch state is the default state of the switch inside the charger and vehicle when not connected.

[c]Optional for charger manufacturer. If configured, the initialization state is disconnected; Without a switch S0 is equivalent to a normally closed state.

[d]Cab be defined by the vehicle manufacturer. The pull-up voltage U2 shall not exceed 28 V.

[e]Optional for vehicle manufacturer. If configured, the initialization state is disconnected.

[f]Can be defined by the vehicle manufacturer.

[g]Optional for vehicle manufacturer. This Annex takes diode D1 not equipped as an example.

C.4 Charging control process

C.4.1 Vehicle connector and vehicle inletplugged: detection of the drivable state of electric vehicle

When an electric vehicle enters the drivable state, the switch Sv shall be closed first. By measuring the voltage value at detection point to confirm whether the CC2 circuit in the vehicle coupler is connected normally. When the voltage value at detection point 3 is the pull-up voltage U2, it is confirmed that the vehicle inlet is not connected to the vehicle

connector and the electric vehicle is in the drivable state.

After the vehicle connector is plugged to the vehicle inlet, the electric vehicle can automatically start a certain triggering condition (such as opening the charging port cover, connecting the vehicle connector to the vehicle inlet, or setting the function trigger of the electric vehicle's charging button, switch, etc.), and put the electric vehicle in a non drivable state through locking devices or other control measures.

C.4.2 Vehicle coupler connection confirmation

C.4.2.1 Vehicle wake-up and confirmation of connection to vehicle coupler

The vehicle controller shall be able to be awakened through detection point 2 or detection point 3 (for electric vehicle that initialization state of switch Sv is close). After wake-up, the vehicle controller shall determine whether the CC1 circuit in the vehicle coupler is connected properly by measuring the voltage value of detection point 2. When the voltage value of detection point 2 is 10.8 V (state A in Table C.2, for electric vehicle equipped with switch S2') or 2.34 V (state B in Table C.2, for electric vehicle without switch S2'), confirm that the CC1 circuit in the vehicle coupler is connected.

For electric vehicle that initialization state of switch Sv is close, the vehicle controller shall close the switch Sv after being awakened.

The vehicle controller shall confirm whether the CC2 circuit in the vehicle coupler is connected properly and the type of charger it is connected to by checking the voltage value of detection point 3. When the voltage value of detection point 3 is half of the pull-up voltage U2, it is confirmed that being connected to the charger using the charging connection device in GB/T 20234.4. Then, for electric vehicles equipped with switch S2', the vehicle controller shall close switch S2'. When the voltage value at detection point 3 is other voltage values, refer to the relevant requirements in Table G.1.

C.4.2.2 Confirmation of connection between charger and vehicle coupler

After the operator sets the charging device for the charger, the device controller determines whether the vehicle connector and inlet are fully connected (CC1 circuit) by measuring the voltage value of detection point 1. When the voltage value of detection point 1 is 2.34 V (see state B in Table C.2), it is confirmed that the vehicle coupler has been fully connected.

C.4.3 Charging connection ready

When the charger allows charging, the device controller shall close switch S1 and establish communication. At this time, the voltage value of detection point 1 is 8.73 V (see state C in Table C-2), and the vehicle sation begins to negotiate the communication version.

When electric vehicles are allowed to charge, the vehicle controller shall close switch S2. After confirming that the vehicle coupler is fully connected and before entering the self check stage of the charger, the electric vehicle shall activate the electronic lock. The vehicle controller shall control the switch Sv to disconnect before the self check stage of

Internal use only, not for resale or public post. www.gbstandards.org

the charger, and maintain the switch Sv in the disconnected state until the end of the energy transfer phase.

When both the charger and the electric vehicle are allowed to charge, the voltage values at detection points 1 and 2 are 5.60 V (see state D in Table C.2).

C.4.4 Charging schedule (optional function)

Before energy transfer, the vehicle controller and device controller can choose to enter the charging reservation. If the charging connection device is disconnected during the reservation process, both parties shall renegotiate the communication version when reconnecting. When either or both parties need to make a schedule, the device controller shall disconnect switch S1 and timing according to the schedule strategy of both parties. After the schedule starts, the vehicle controller shall disconnect switch S2 (if S2 is already closed) and enter sleep mode, while switch S2 'shall remain closed (for electric vehicles equipped with switch S2'). During the sleep period of electric vehicles, the voltage values of detection points 1 and 2 are both 2.34 V (see state B in Table C.2). When the schedule time arrives, the device controller closes switch S1 to wake up the electric vehicle and start data exchange. At this time, the voltage values of detection point 1 and detection point 2 are both 8.73 V (see state C in Table C.2). Within 10 seconds after switch S1close, the electric vehicle is awakened, and the vehicle controller shallclose switch S2. At this time, the voltage values of detection point 1 and detection point 2 are both 5.60 V (see state D in Table C.2).

NOTE If the electric vehicle is awakened and needs to continue schedule, the vehicle controller will inform the charger of the new schedule information through a communication message. Enter a new round of schedule process. When no further schedule is required, both parties proceed to the next stage. Under consideration.

C.4.5 Self check stage

After the vehicle coupler is fully connected and C5 and C6 are closed, the equipment controller first checks that the absolute value of the voltage on the outside of C1 and C2 shall not exceed 60 V DC, confirms that the outside of the vehicle power supply circuit is normal; At the same time, by measuring the voltage value of detection point 1 is 5.60 V (see state D in Table C.2), confirms that switch S2 is in the closed state, otherwise charging is not allowed. During the self checkstage, the charger shall perform contact adhesion detection and short circuit detection on the C1 and C2 DC power supply circuits, as well as insulation monitoring inside the charger (including charging cables). During insulation monitoring, the charger shall close C1 and C2, and the output cable insulation monitoring voltage shall be the smaller of the maximum allowable total charging voltage of the vehicle and the maximum charging voltage of the charger in the parameter negotiation (specific requirements shall meet C.7.3); After insulation monitoring is completed, the IMD is physically separated from the strong current circuit and connected to the relief circuit to discharge the DC output voltage; After the discharge is completed, the relief circuit shall be separated from the strong current circuit; When the voltage between DC+ and DC- in the DC power supply circuit drops below 60 V DC, disconnect

Internal use only, not for resale or public post.

C1 and C2.

C.4.6 Power supply mode (optional function)

C.4.6.1 Before energy transfer, if the power battery state does not allow charging and a charger is required for power supply, the vehicle controller can negotiate the power supply mode function with the equipment controller. When both parties confirm through functional negotiation that they support the power supply mode function, after the self check stage and before pre charging, the electric vehicle disconnects the power battery connection and is supplied with constant voltage by the charger.

NOTERefer to Annex J for another pulse heating power supply mode scheme.

C.4.6.2 During the power supply mode stage, the charger is responsible for insulation monitoring. The vehicle controller shall disconnect the electrical connection between the power battery and C5 and C6, and discharge the voltage of the outer circuit of the power battery to below 60 V DC, then close C5 and C6; The device controller shall close C1 and C2 after confirming that the vehicle power supply is ready. Only when the vehicle controller confirms that the power supply status of the charger is ready and the current maximum output current value of the charger is not less than the current maximum power supply target current of the entire vehicle, can the high-voltage load inside the electric vehicle be conducted.

NOTE During the power supply mode stage, electric vehicle does not connect to the power battery. The high-voltage load inside the electric vehicle may be resistive or inductive, and there may be significant ripple in the output voltage and current of the charger.

C.4.6.3 In the power supply mode stage, the vehicle controller sends real-time vehicle power supply target parameters to the device controller, and the current maximum power supply target current shall include the starting current of the high-voltage load inside the electric vehicle.

C.4.6.4 The device controller shall have a soft start function (1 second to 8 seconds) when adjusting the output power supply voltage. During the start-up process of voltage stabilization work, the output voltage overshoot shall not exceed 5% of the current set value. When the charger resumes power supply mode from a paused state, the above requirements shall also be met.

C.4.6.5 During the power supply mode stage of 4.5.5, in constant voltage power supply mode, when the output current of the charger is 5 A or less, the duration of the output that can be maintained shall not be less than 10 minutes.

C.4.6.6 In the power supply mode stage, under constant voltage power supply mode, the output voltage of the charger shall meet the target voltage of the vehicle's power supply, and the output current capacity shall not be less than the current maximum power supply target current of the vehicle.

C.4.6.7 In the power supply mode stage, when the current maximum output current value of the charger is less than the current maximum power supply target current of the entire

Internal use only, not for resale or public post.

vehicle, if the electric vehicle determines that it can reduce power to start the internal high-voltage load, the vehicle controller shall adjust the current maximum power supply target current of the entire vehicle to be lower than the current maximum output current value of the charger; If the electric vehicle determines that the internal high-voltage load cannot work properly, the vehicle controller can send a power supply mode end message to exit the power supply mode stage; If the internal high-voltage load undervoltage protection of the electric vehicle is triggered, the vehicle controller can send a vehicle termination message to end the charging process.

C.4.6.8 During the power supply mode stage, when the charger needs to adjust the output power to be less than the current maximum power supply target current of the entire vehicle, the current maximum output current value shall be updated first. After the vehicle controller responds to adjusting the load power consumption and updating the current maximum power supply target current of the entire vehicle, the output capacity can be adjusted. During the power regulation process, the charger shall not be subjected to undervoltage protection. If undervoltage protection is used, it shall have a fault self recovery function.

C.4.6.9 During the power supply mode stage, when the vehicle controller needs to adjust the power supply target to exceed the current maximum output current value of the charger, the current maximum power supply target current of the entire vehicle shall be updated first. Before the equipment controller completes the adjustment and updates the current maximum output current value, the vehicle controller shall not adjust the actual power consumption to exceed the current maximum output current of the charger.

C.4.6.10 After the end of the power supply mode stage, the vehicle controller shallclose the internal high-voltage load and disconnect C5 and C6. After the equipment controller detects that the current has decreased to 5 A or less, it shall disconnect C1 and C2, and then switch on the relief circuit to reduce the front-end voltage of C1 and C2 to below 60 V DC.

C.4.6.11 During the power supply mode stage, the shutdown conditions and triggering time for electric vehicle faults are defined by the manufacturer, and the specific execution actions shall comply withprovisions of C.4.10 or C.4.11.

C.4.6.12 During the power supply mode stage, the shutdown conditions for charger faults include but are not limited to:

- power supply voltage mismatch: the vehicle's target voltage exceeds the range of the charger's output voltage, or the charger cannot control the difference between the output voltage and the vehicle's target voltage to stabilize within ± 5%;
- Abnormal power supply current: The current maximum power supply target current of the entire vehicle is lower than the minimum charging output current value of the charger;
- Vehicle logic error: The received vehicle power supply state changes from ready to not ready;

Internal use only, not for resale or public post.

- Insulation exceeding limit or earthing fault.

C.4.7 Pre charging

The vehicle controller first closes C5 and C6 to make the vehicle power supply circuit conductive; After the device controller detects that the current vehicle power supply circuit voltage is normal (confirming the voltage at the outer terminals of contactors C1 and C2: the error range with the communication message battery voltage is ≤ ± 5% and within the normal operating voltage range of the charger), it configures the circuit accordingly and conducts pre charging according to C.7.5 before conducting the DC power supply circuit.

C.4.8 Energy transfer stage

C.4.8.1 Charging mode

In the energy transfer stage, the vehicle controller sends real-time battery charging target parameters to the device controller. When the device controller adjusts the charging current to decrease: when ΔI/dlmin ≤l s, adjusting the charging current to be consistent with the command value within 1 second at most; when ΔI/dlmin>l s, at most ΔI/dlmin s (dlmin is the current adjustment rate, at least 20 A/S). The device controller adjusts the charging voltage and current in real-time based on the battery charging target parameters. In addition, the vehicle controller and device controller shall send their respective status information to each other. During the entire energy transfer process and power supply mode, the charger is responsible for monitoring the insulation performance of the DC power supply circuit to earth.

Charger manufacturers can customize the current adjustment rate when increasing current and the current adjustment rate when decreasing current, and inform electric vehicles through digital communication.

C.4.8.2 Discharge mode or other operating modes (optional function)

According to the functional negotiation results, if both the charger and electric vehicle support discharge mode or other working modes, they will enter the corresponding working mode for energy transfer. The discharge control process is shown in E.5.

C.4.8.3 Vehicle coupler temperature rise capability detection (optional function)

To confirm the integrity of the vehicle coupler DC power supply circuit and avoid unexpected defects such as wear and tear on the vehicle coupler causing excessive temperature rise during high current transmission, the charger can choose to perform temperature rise capability testing on the vehicle couplerin the energy transfer stage. When the charging target current of the vehicle coupler is greater than or equal to the maximum operating current value specified by the manufacturer under non cooling conditions (defined in GB/T 20234.4), the charger shall be tested according to the maximum operating current value under non cooling conditions for a duration of 1 minute. If the temperature rise rate exceeds the manufacturer's specified limit during the testing

Internal use only, not for resale or public post. www.gbstandards.org

period, the charger shall trigger an error shutdown. After the test, charger opens the cooling system and charges according to the present vehicle charging requirements (the current adjustment rate shall comply with the provisions of C.4.8.1). Throughout the entire testing process, the vehicle controller shall not conduct compliance evaluations on the current measured current values.

C.4.9 Charging shutdown under normal conditions

C.4.9.1 Normal charging shutdown of charger

When the termination conditions set by the user are met, such as card swiping stop, reaching 0 standard SOC, or receiving a vehicle termination message, the device controller sends a termination message, and shall reduce the charging current to 5 A or less within 5 seconds at the same time, then disconnects contactors C1 and C2, and switch S1; After confirming the disconnection of vehicle C5 and C6, relieve the voltage between the DC power supply circuit DC+ and DC- at the vehicle coupler to below 60 V DC, and separates the relief circuit from the strong current circuit. When the vehicle coupler is disconnected, the voltages between the DC power supply circuit DC+ and DC-, DC+ and PE, and DC- and PE are all less than 60 V DC.

C.4.9.2 Normal charging shutdown of vehicle

The vehicle controller, based on the battery system, determines that the charging end condition has been reached or receives a charging termination message from the charger. After confirming that C1 and C2 are disconnected, it can perform C5 and C6 adhesion detection, then disconnects C5 and C6, and finally disconnects switch S2. When unlocking the electronic lock, the vehicle coupler voltage shall drop below 60 V DC. For electric vehicles equipped with switch S2', the vehicle controller can disconnect switch S2' before disconnecting the vehicle coupler.

The DC charging connection process and control timing for vehicle terminating charging are shown in Figure C.4.

C.4.10 Error shutdown

C.4.10.1 Charger error shutdown

Before pre charging, when the charger confirms the error occurrence in the vehicle power supply circuit, such as abnormal voltage in the vehicle power supply circuit on the outside of C1 and C2 (with an error range greater than 5% of the current voltage measurement value at the vehicle coupler in the communication message or not within the normal charging range of the charger), the device controller shall send a termination message, disconnect switch S1, and do not allow charging.

During the self check stage, power supply mode, and pre charging, when the charger confirms the error occurrence, the device controller shall send a termination message and lower the voltage between the DC power supply circuit DC+ and DC -, DC+ and PE, and DC- and PE at the vehicle coupler to below 60 V DC, disconnect switch S1 and do not allow charging.

Internal use only, not for resale or public post.

In the energy transfer stage, when the charger confirms the error occurrence, the equipment controller shall simultaneously start the following actions, and the specific time shall comply with the provisions of Table C.14:

- Send a termination message and reduce the output current at the vehicle coupler to 5 A or less;
- Confirm that the voltage between DC+and DC-, between DC+and PE, and between DC- and PE in the DC power supply circuit drops below 60 V DC.

The equipment controller shall disconnect switch S1 after confirming that contactors C1 and C2 are disconnected; After confirming the disconnection of vehicle C5 and C6, discharge the voltage between the DC power supply circuit DC+and DC- at the vehicle coupler to below 60 V DC, and shall separate the relief circuit from the strong current circuit.

Refer to Figure C.5 for the DC charging connection process and control timing for charging error shutdown, and the triggering time and Act time shall comply with the provisions of Table C.14

C.4.10.2 Vehicle error shutdown

In the energy transfer stage, when the vehicle confirms the error occurrence, the vehicle controller shall send a termination message. After confirming that the charging current has dropped to 5 A or less and C1 and C2 are disconnected, can perform C5 and C6 adhesion detection, disconnects C5 and C6, and then disconnects switch S2. The triggering time and response act time are customized by the vehicle manufacturer. When unlocking the electronic lock, the vehicle coupler voltage shall drop below 60 V DC. For electric vehicles equipped with switch S2', the vehicle controller can disconnect switch S2' before disconnecting the vehicle coupler.

The DC charging connection process and control timing for charging error shutdown are shown in Figure C.5.

C.4.11 Emergency shutdown

C.4.11.1 Emergency shutdown of charger

In the energy transfer stage, when an emergency occurs, the charger quickly notifies the electric vehicle by disconnecting switch S1.

After the charger detects an emergency situation or the voltage at detection point 1 exceeds the normal charging range (see state D specified in Table C.2) (trigger time defined in Table C.15), the equipment controller shall simultaneously perform the following actions:

- Reduce the charging current to 5 A or less within 20 ms and disconnect switch S1;
- Disconnect contactors C1 and C2 within 100 ms;

Internal use only, not for resale or public post.

- Reduce the voltage of the DC power supply circuit between DC+ and DC -, between DC+ and PE, and between DC- and PE to below 60 V DC within 1 second;
- Send a termination message.

After confirming the disconnection of vehicle C5 and C6, discharge the voltage between the DC power supply circuit DC+ and DC- at the vehicle coupler to below 60 V DC, and separate the relief circuit from the strong current circuit.

A typical DC charging connection process and control timing for charging emergency shutdown is shown in Figure C.6, and the triggering time and act time shall comply with the provisions of Table C.15.

C.4.11.2 Emergency shutdown of vehicles

In the energy transfer stage, when an emergency occurs, electric vehicles quickly inform the charger by disconnecting switch S2.

When an electric vehicle detects its own emergency situation (trigger time defined in Table C.16), shall disconnect C5 and C6 within 210 ms after disconnecting switch S2; Alternatively, when the vehicle controller measures the voltage change at detection point 2 and determines that the charger switch S1 is disconnected, it disconnects C5 and C6 within 200 milliseconds. When unlocking the electronic lock, the vehicle coupler voltage shall drop below 60 V DC. For electric vehicles equipped with switch S2', the vehicle controller can disconnect switch S2' before disconnecting the vehicle coupler.

The DC charging connection process and control timing for a typical charging emergency shutdown are shown in Figure C.6, and the triggering time and act time shall comply with Table C.16.

C.5 State transition diagram and control timing table of control pilot circuit

C.5.1 Control pilotcircuit state

The state of the control pilot circuit is shown in Table C.2.

Internal use only, not for resale or public post.

Table C.2 - Control pilot circuit state

State of charging process	Voltage at detection point 1 [a] V			Voltage at detection point 2 [a] V			Voltage at detection point 3 a Usv open/ Usv close			Switch				Allow for charging [b]		Remarks
	Min. value	Nominal value	Max. value	Min. value	Nominal value	Max. value	Min. value	Nominal value	Max. value	S1	S2' [c]	S2	Sv	Charger	EV	
State A	10[d]	12[d]	13[d]	0	0	0	0/10[c]	0/12[e]	0/13[e]	Open	Open	Open	Open/ Close [e]	No	No	Gun not plugged
	10[c]	12[c]	13[c]	0	0	0	0/5[e]	0/6[£]	0/7[e]	Open	Open	Open	Open/ Close [e]	No	No	Insert gun half plugged, only CC2 inserted
	10	12	13	0	0	0	0	0	0	Close	Close	Close	Open	No	No	In the energy transfer stage, the PE line on the charger side is broken
	10	12	13	0	0	0	-13	-12	-10	Close	Close	Close	Open	No	No	In the energy transfer stage, the PE pin at the vehicle coupler is broken or the PE wire on the vehicle side is broken
State A’	10	10.8	13	9. 3	10.8	12	0/5[c]	0/6[c]	0/7[e]	Open	Open	Open	Open/ Close [e]	No	No	Fully plugged (for S2'normally open)
State B	2	2. 34	4	1. 5	2. 34	4	0/5[e]	0/6[£]	0/7[e]	Open	Close	Open	Open/ Close [e]	No	No	After fully plugging in, the car switch circuit (for S2'normally open), fully plugging in (for S2' normally closed), vehicle station schedule in progress, before pulling out the gun

Internal use only, not for resale or public post.

Table C.2 - Control pilot circuit status (continued)

State of charging process	Voltage at detection point 1 [a] V			Voltage at detection point 2 [a] V			Voltage at detection point 3 [a] Usv open/ Usv close			Switch				Allow for charging [b]		Remarks
	Min. value	Nominal value	Max. value	Min. value	Nominal value	Max. value	Min. value	Nominal value	Max. value	S1	S2' [c]	S2	Sv	Charger	EV	
State C [f]	7	8. 73	10	7	8. 73	9. 3	0/5[e]	0/6[e]	0/7[e]	Close	Close	Open	Open/ Close [e]	Yes	No	Charger ready
	7	8. 73	10	7	8. 73	9. 3	0	0	0	Close	Close	Open	Open	Yes	No	Emergency shutdown of vehicle during energy transfer phase
State D [f]	4	5. 6	7	4	5. 6	7	0	0	0	Close	Close	Close	Open	Yes	Yes	Energy transfer in progress
State E	0.5	0.88	2	0. 5	0.88	1.5	0/5[e]	0/6[£]	0/7[e]	Open	Close	Close	Open/ Close [e]	No	No	Vehicle ready
	0.5	0. 88	2	0.5	0. 88	1.5	0	0	0	Open	Close	Close	Open	No	No	Emergency shutdown of charger during energy transfer stage

[a]All voltages are valid values measured at the vehicle coupler or equivalent position after stabilization. For the voltage range of detection points 1 and 2, the minimum value (inclusive) and maximum value (exclusive), refer to specified in the relevant testing standards for the specific test limi values.

[b]For the charger, it is allowed to conduct the DC power supply circuit (close switch S1); For vehicle, it is allowed to conduct the vehicle power supply circuit (close switch S2).

[c]For electric vehicle equipped with switch S2', the initialization state of S2' is disconnected.

[d]For charger equipped with switch S0, the voltage at detection point 1 is within the range when the S0 is closed.

[e]The voltage at detection point 3 corresponds to the state of the switch Sv when it is open or closed.

[f]For electric vehicles equipped with switch S2', in the energy transfer stage, if S2' disconnects, the voltage at detection point 1 and detection point 2 may be within the range of state C or state D.

Internal use only, not for resale or public post.

C.5.2 state transition diagram of control pilot circuit

The state transition of the DC charging control pilot circuit is shown in Figure C.2.

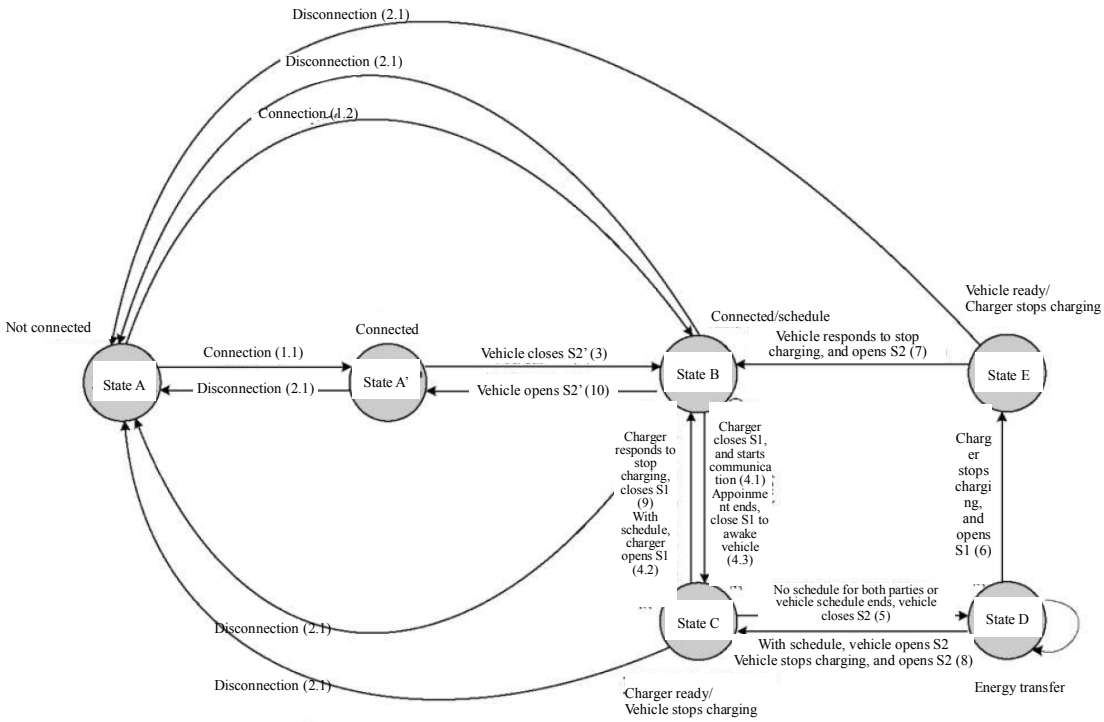

NOTE 1: Disconnect also includes situations except the electronic lock is not reliably locked in the energy transfer stage.

NOTE 2: The numbers in parentheses in the figure correspond to the timing in Table C.3.

Figure C.2 - State transition diagram of control pilot circuit(detection point 1)

The state transition table of the DC charging control pilot circuit is shown in Table C.3 (take the pull-up voltage U2 is 12 V and the Rv equivalent resistance is 1000 U as an example).

Table C.3 - State transition table of control pilot circuit

Timing	State	Conditions	Remarks
1.1 Connection (for electric vehicles equipped with switch S2')	StateA	The electric vehicle is not connected, the voltage at detection point 1 is 12 V, and the voltage at detection point 2 is 0 V. The electric vehicle may be in a sleep state	Physical connection
	StateA→StateA'	Electric vehicle and charger are connected through charging cable. The device controller determines whether the vehicle connector is completely connected to the vehicle inlet by measuring the voltage value at detection point 1 (CC1 circuit). The voltage at detection point 1 is from 12 V to 10.8 V; The voltage at detection point 2 is from 0 V to 10.8 V. The electric vehicle is awakened. If the Sv inside the electric vehicle is a normally closed switch before connection, the electric vehicle can be awakened through detection point 3	

Table C.3- State transition table of control pilot circuit(continued)

Timing	State	Conditions	Remarks
1.1 Connection (for electric vehicles equipped with switch S2')	StateA’	For electric vehicle that Sv switch is normally open before connection, the vehicle controller closes switch Sv. The vehicle controller determines whether the vehicle connector is completely connected to the vehicle inlet (CC2 circuit) by checking the voltage value at detection point 3 and confirms the type of charger connected: a) If the voltage at detection point 3 is 6 V, confirm that it is connected to the charger using the charging connection device specified in GB/T20234.4; b) If the voltage at detection point 3 is 8 V, confirm that it is connected to the charger using the charging connection device specified in GB/T 20234.3-2023; c) If the voltage at detection point 3 is non 6 V and 8 V, refer to Annex H.3.2 for judgment. Situations when the pull-up voltage U2 is 12V.	
1.2 Connection (for electric vehicles not equipped with switch S2 ')	StateA→StateB	Electric vehicle and charger are connected through charging cable. The device controller determines whether the vehicle connector is fully connected to the vehicle inlet (CC1 circuit) by measuring the voltage value at detection point 1. The voltage at detection point 1 is from 12 V to 2.34 V; Detection point 2 voltage is from 0 V to 2.34 V. The electric vehicle is awakened. If Sv inside the vehicle is a normally closed switch before connection, the vehicle can also be awakened using detection point 3.	
	StateB	For electric vehicle that Sv switch is normally open before connection, the vehicle controller closes switch Sv. The vehicle controller determines that the vehicle connector is completely connected to the vehicle inlet (CC2 circuit) by checking the voltage value of detection point 3, and confirms the type of charger connected to it: a) If the voltage at detection point 3 is 6 V, confirm that it is connected to the charger using the charging connection device specified in GB/T 20234.4; b) If the voltage at detection point 3 is 8 V •, confirm that it is connected to the charger using the charging connection device specified in GB/T 20234.3-2023; c) If the voltage at detection point 3 is non 6 V and 8 V, refer to Annex H.3.2 for judgment. Situations when the pull-up voltage U2 is 12V.	
2.1 Disconnect (except for energy transfer stage)	StateA’ →StateA (StateB→ StateA, StateC→ StateA, StateE→ StateA)	When the vehicle couplercompletely disconnect or CC1 is disconnected, the device controller detects that the voltage at detection point 1 is from 10.8 V (2.34 V, 8.73 V, 0.88 V) to 12 V, and charging is not allowed. The vehicle controller measures that the voltage at detection point 2 is from 10.8 V (2.34 V, 8.73 V, or 0.88 V) to 0 V, or in the Sv closed state,	Disconnection

Internal use only, not for resale or public post.

		it detects that the voltage at detection point 3 is from 6 V to 12 V, and charging is not allowed	
3 Hardware version switching (for electric vehicles equipped with switch S2')	StateA’→StateB	The vehicle controller closes switch S2’, When the device controller detects that the voltage at detection point 1 is from 10.8 V to 2.34 V, it is judged that the vehicle coupler is fully connected	

Table C.3 -State transition table of control pilot circuit(continued)

Timing	State	Conditions	Remarks
4.1 Communication version negotiation (S1 closed)	StateB→ StateC	The device controller closes switch S1 and measures that the voltage at detection point 1 isfrom 2.34 V to 8.73 V, starts to enter communication version negotiation. The vehicle controller measures the voltage at detection point 2 is from 2.34 V to 8.73 V, waits for the "charger protocol version" message	
	StateC	Enter the version negotiation stage, where both parties interact and confirm the communication protocol version information. After successful negotiation, proceed to the function negotiation and parameter configuration stage. After EV confirms that the vehicle coupler is fully connected, actives the electronic lock and securely locked. The vehicle controller shall control switch Sv to disconnect after the switch S2' closes (for electric vehicles equipped with switch S2') and before the self check of the charger, and keep the disconnected state of switch Sv until the end of the energy transfer phase	
4.2 Starting schedule (Vehicle sleep)	StateC→ StateB	When either the electric vehicle or the charger has an schedule, both parties exchange schedule parameters during the functional negotiation stage. The device controller shall disconnect switch S1. The vehicle controller disconnects switch S2, and the voltage at detection point 1 is from 8.73 V to 2.34 V; The vehicle controller keeps switch S2 in the disconnected state	
	StateB	Electric vehicle enters sleep mode; Timed by the charger according to the reservation strategy of both parties	
4.3 Schedule completion (charger ready)	State B→ StateC	After the schedule time is reached, the charger closes switch S1, and the voltage at detection point 1 is from 2.34 V to 8.73 V. The charger is ready to charge and informs the vehicle through a message that the schedule iscompleted; The voltage at detection point 2 is 8.73 V, and the electric vehicle shall be able to be awakened and respond to communication interaction	
5 Self check, power supply mode (optional), pre charging and energy transfer stage (vehicle charging ready)	StateC→ State D	Both parties have no schedule or electric vehicle confirms that the scheduleis completed. The vehicle controller closes switch S2, and the vehicle is ready for charging. Votage at detection point 1 is from 8.73 V to 5.60 V. The votage at detection point 2 is from 8.73 V to 5.60 V	
	State D	The voltage at detection point 1 is 5.60 V, and the voltage at detection point 2 is 5.60 V. Electric vehicles and chargers shall allowcharging, enter the charger self check, power supply mode (optional), pre charging, and energy transfer stages	
6. Charger stops charging	StateD→ StateE	In energy transfer, when the charger meets the normal stop charging conditions (see C.4.9.1) error occurance condictions (see C.10.1) or emergency condicitons (see C.4.11.1),shall disconnect switch S1 (the	

		voltage at detection point 1 from 5.60 V to 0.88 V), and executethe corresponding stop charging operation	

Internal use only, not for resale or public post.

Table C.3 -State transition table of control pilot circuit(continued)

Timing	State	Conditions	Remarks
7. Vehicle responds to the charger stopping charging	State E→ StateB	In energy transfer, when the vehicle controller measures the voltage at detection point 2 from 5.60 V to 0.88 V or receives a stop message, it disconnects switch S2 (voltage at detection point 2 from 0.88 V to 2.34 V), sends a termination message, and executes the corresponding stop charging operation	
8. Vehicle stops charging	StateD→ StateC	In energy transfer, when electric vehicle meets the normal stop charging conditions (see C.4.9.2) , error occurance codiitons (see C.4.10.2) or emergency condictions (see C.4.11.2),shall disconnect switch S2 (the voltage at detection point 2 is from 5.60 V to 8.73 V) andexecute the corresponding stop charging operation	
9. Charger responds to vehicle stop charging	StateC→ StateB	In energy transfer, when the device controller measures the voltage at detection point 1 is from 5.60 V to 8.73 V or receives a stop message, it disconnects switch S1 (voltage at detection point 1 is from 8.73 V to 2.34 V), sends a stop message, and executes the corresponding stop charging operation	
10. Disconnect switch S2'before disconnecting the vehicle coupler (for electric vehicles equipped with switch S2')	State B → StateA’	Disconnect switch S2’ from the electric vehicle. Allow the vehicle connector to be pulled out of the vehicle inlet	

C.6 Timing of charging connection control

A typical DC charging connection process and control timing are shown in Figure C.3, taking the configuration of S2'switch and normal vehicle shutdown as an example.

Internal use only, not for resale or public post. www.gbstandards.org

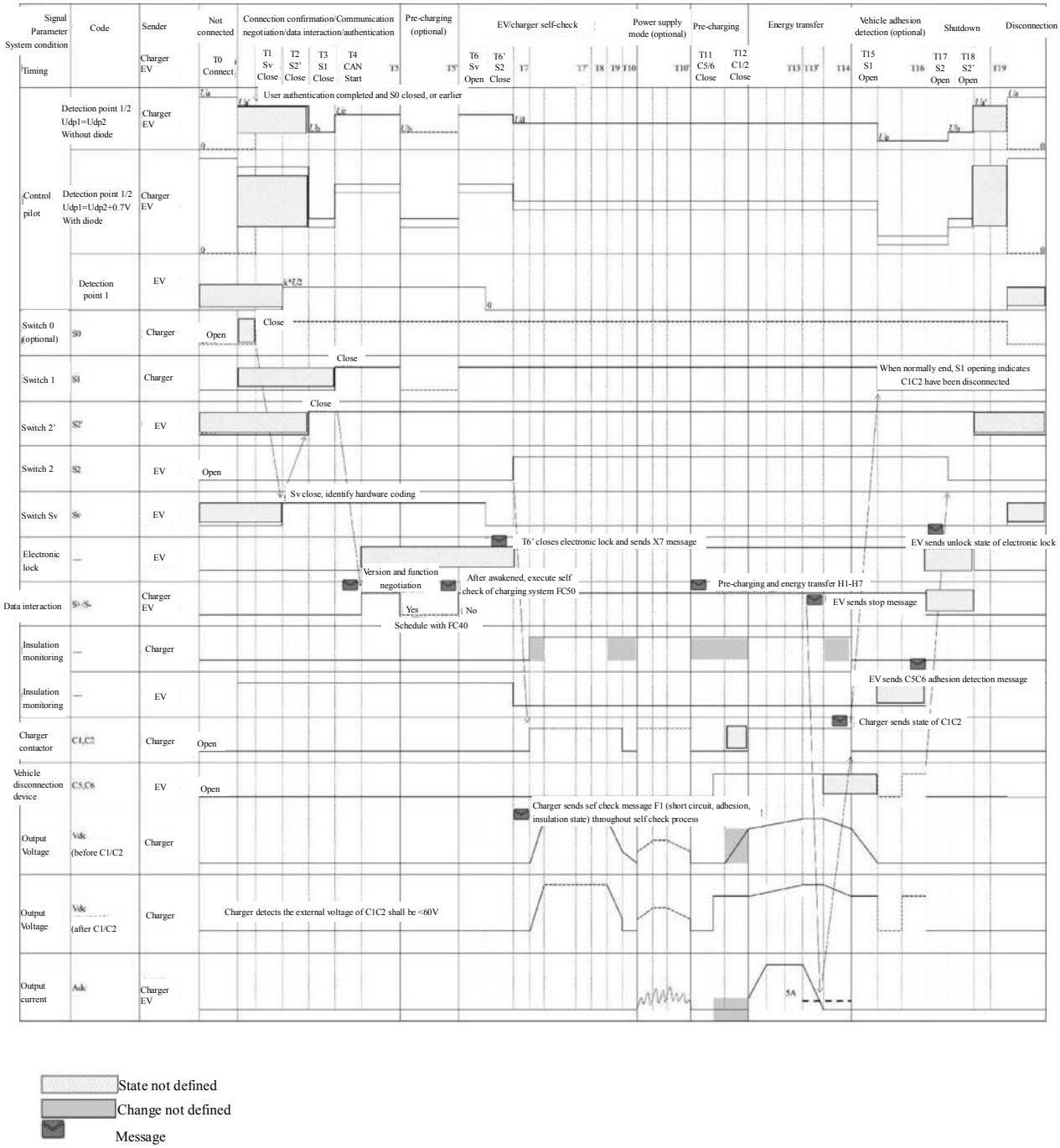

NOTE The voltage values at the detection points Ua, Ua', Ub, Uc, Ud correspondsto voltage values under state A, state A', state B, state C, and state Dshown in Table C.2.

Figure C.3 - Timing diagram of DC charging connection control (normal shutdown)

The description of timing of charging connection control corresponding to Figure C.4 is shwone in Table C.4.

Table C.4 - DC charging control timing table (normal shutdown)

T0	Connect the charging connection device, and the electronic lock is in a naturally open state. The switch S1 and S2 are in the normally open state. The state of switch Sv and S2'is customized by the electric vehicle, either normally open or normally close. The voltage at detection point 1 is from 12 V to 10.8 V (or 2.34 V). The voltage at detection point 2 is from 0 V to 10.8 V (or 2.34 V), and the vehicle controller is awakened by the voltage at detection point 2. When the voltage detected is 2.34V, the charger is confirmed fully connected

Internal use only, not for resale or public post.

Table C.4 - Timing table of DC charging control (normal shutdown) (continued)

T1	Electric vehicle closes Sv (regardless of whether Sv is normally open or closed, shall be closed before T1). Voltage at detection point 3 is half of the pull-up voltage U2, confirm that the CC2 circuit in the vehicle couplerand connect to the charger using GB/T 20234.4 charging connection device
T2	Switch S2' closes, the voltage at detection point 1 and detection point 2 is 2.34 V, and the charger is confirmed fully connected
T3	After the charger is ready to charge, close switch S1, and the voltage at detection points 1 and 2 is 8.73 V. If switch S1 is not detected to be closed, the electric vehicle will enter sleep mode
T4	The charger first initiates version negotiation. (T4-T3)<1 s. If not receving version negotiation message, electric vehicles can enter sleep mode
T5	Successful negotiation of scheduced charging between charger and electric vehicle
T5→T5’	This stage is an optional reservation charging function module. At T5 moment S1 switch disconnects and S2 'switch remains closed to enter the reservation stage; At time T5, switch S1 closes again to wake up the vehicle and enter T6. This stage is an example and can also occur after the self check stage of the charger. If switch S2’ disconnects during the scheduled charging stage (2.34 V-10.8 V), the device controller shall close Sl (10.8 V-11.9 V) and send an error message while waiting for switch S2’ to close. If detecting switch S2’ close (11.9 V-8.73 V) within 10 seconds after closing S1, then disconnect switch S1 and continue the scheduled charging time; Otherwise, stop charging
T6→T6’	After the electric vehicle is ready for charging, shall close switch S2 at T6'. When switch S2 closes, the electronic lock should be locked. After switch S2 closes, the electric vehicle stops its internal insulation monitoring. Sv switch shall disconnect at any time before switch S2 closes (T6') (such as T6). After T6', the voltage at detection point 1 is 5.6 V, and the voltage at detection point 3 is 0 V
T7	Device controller closed C1 and C2
T7→T7’	This stage is the time period for conducting C1 and C2 contact adhesion detection, short circuit detection of the power supply circuit, and insulation monitoring [inside the charger (including charging cables)] for the charger
T8	After the insulation monitoring is completed, the equipment controller disconnects the insulation detection circuit switch and begins relief.
T8→T9	Disconnect C1 and C2 after putting intorelief circuitto redice the output voltage belwo 60V DC. After the discharge is completed, the relief circuit shall be physically separated from the high-voltage circuit
T9	Device controller disconnected C1 and C2
T10→T10’	This stage is an optional power supply mode (battery heating) function module, where the charger supplies power to the high-voltage load inside the electric vehicle based on the charging target voltage of the electric vehicle. Pulse heating power supply mode scheme can also be adopted (see Annex J)
T11→T12	The vehicle controller closes C5 and C6, and the charger can start pre charging by activating the bypass pre charging circuit. At charger side, conducting the power supply circuit no later than T12 (T12-T11) ≤ 10s
T12	The device controller closes Cl and C2, enters the energy transfer stage. The charger adjusts the charging voltage and current based on the real-time battery charging target sent by the electric vehicle, and opens insulation monitoring in the energy transfer stage
T13	The electric vehicle reaches the charging end condition, the vehicle controller sends a termination

Internal use only, not for resale or public post.

	message
T13→T13’	The device controller reduces the charging current to 5 A or less
T14	The device controller disconnects C1 and C2, stops insulation monitoring in the energy transfer stage, and puts the relief circuit into operation to relieve the output voltage

Internal use only, not for resale or public post. www.gbstandards.org

Table C.4 - Timing table of DC charging control (normal shutdown) (continued)

T15	After Cl and C2 disconnects, the device controller disconnects switch S1, and the voltage at detection point 1 is 0.88 V
T14→T16	Adhesion detection for C5 and C6 (optional). If adhesion detection is performed, relevant messages shall be sent to the device controller. Before T16, C5 and C6 disconnect; After T16, confirm that the vehicle coupler voltage drops below 60 V DC, the electronic lock can be unlocked, and the electric vehicle can restart internal insulation monitoring
T17	After C5 and C6disconnect, the vehicle controller disconnects switch S2, and the voltage at detection points 1 and 2 is 2.34 V
T18	Switch S2'can disconnect. At the latest, the connection device disconnects at T19. The voltage at detection point 1 is 10.8 V. T18 is the last moment when the electronic lock is opened and also the last moment when communication ends. (T18-T17)<5 s
T19	Charging connection device disconnects, Sv Sv returns to its initiation state (normally open of normally close). The voltage at detection point 1 is 12 V, ， The voltage at detection point 2is 0 V

A typical DC charging connection process and control timing for charging error shutdownare shown in Figure C.5, taking an electric vehicle equipped with switch S2'as an example

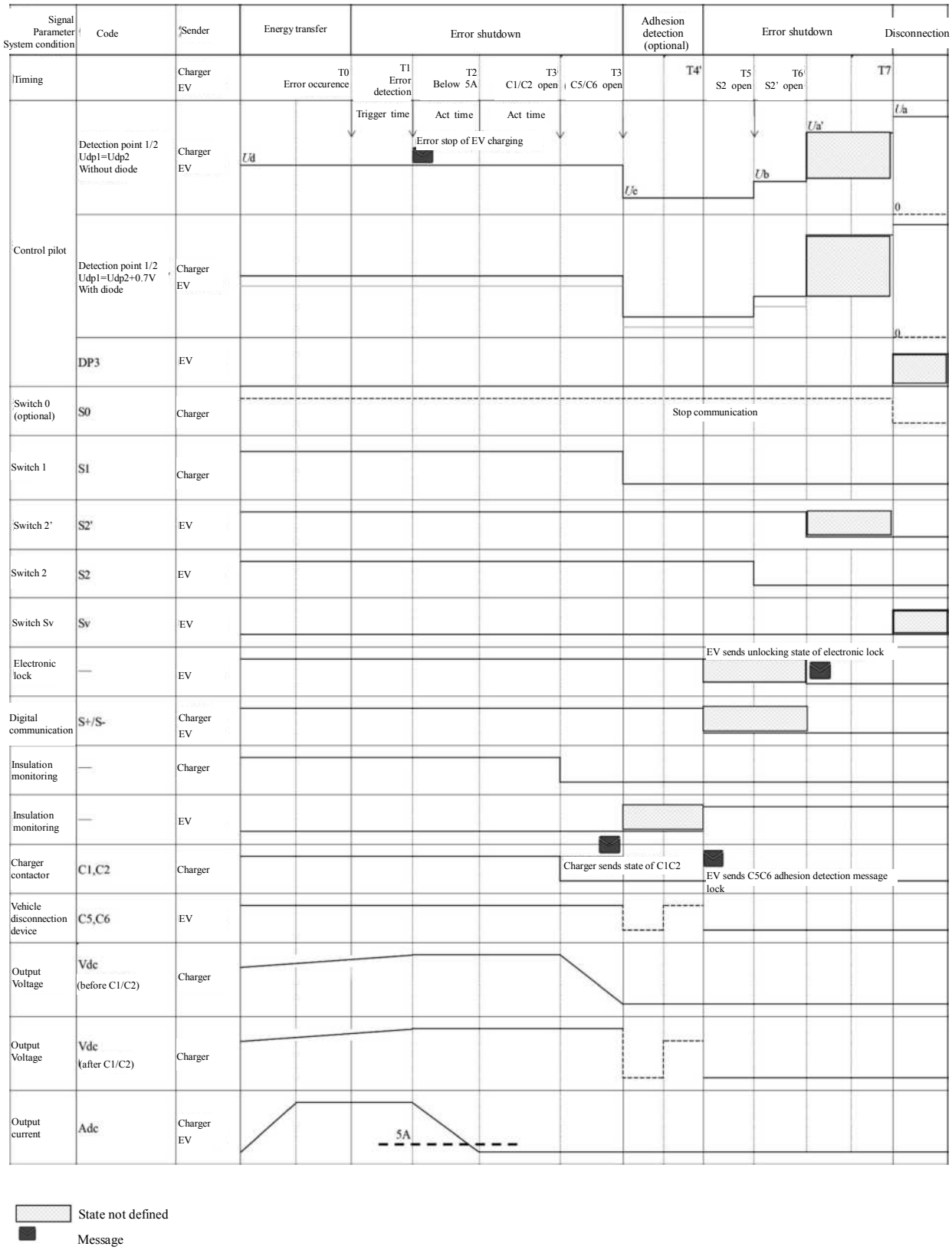

NOTE The voltage values at the detection points Ua, Ua', Ub, Ud, Ue corresponds to voltage values under state A, state A', state B, state D, and state Eshown in Table C.2.

Figure C.4 –Timing diagram of DC Charging control (error shutdown)

The timing of charging connection control corresponding to Figure C.4 is shown in Table C.5.

Table C.5 - Timing table of DC charging control (error shutdown)

T0	The time when a fault occurs in the energy transfer stage. The fault list is shown in Table C.14
T1	The fault situation passes T0-T1 time, when the charger or electric vehicle detects it, sending a termination message to the other party. T0-T1 is the triggering time, as shown in Table C.14
Tl→T2	Device controller reduces the charging current to 5 A or less. The operating time shall comply with the provisions of Table C.14
T3	Device controller disconnects C1 and C2 and stops insulation monitoring in the energy transfer stage
T4	Device controller disconnects S1, and the voltage at detection point 1 is 0.88 V. If the electric vehicle does not have adhesion detection function, disconnect C5 and C6
T4→T4’	Adhesion detection of vehicle C5 and C6 (optional), after the detection is completed, the vehicle disconnects C5 and C6
T5	Vehicle controller disconnects switch S2, the voltage at detection point 1 is 2.34 V
T6	Switch S2 'can disconnect, at the latest, the connection device disconnects at T7. The voltage at detection point 1 is 10.8 V. T6 is the last moment when the electronic lock is opened and also the last moment when communication ends
T7	The charging connection device disconnects. Sv returns to its default state. The voltage at detection point 1 is 12 V, and the voltage at detection point 2 is 0 V

A typical DC charging connection process and control timing for charging emergency shutdownare shown in Figure C.5, taking an electric vehicle equipped with switch S2'as an example.

Internal use only, not for resale or public post.

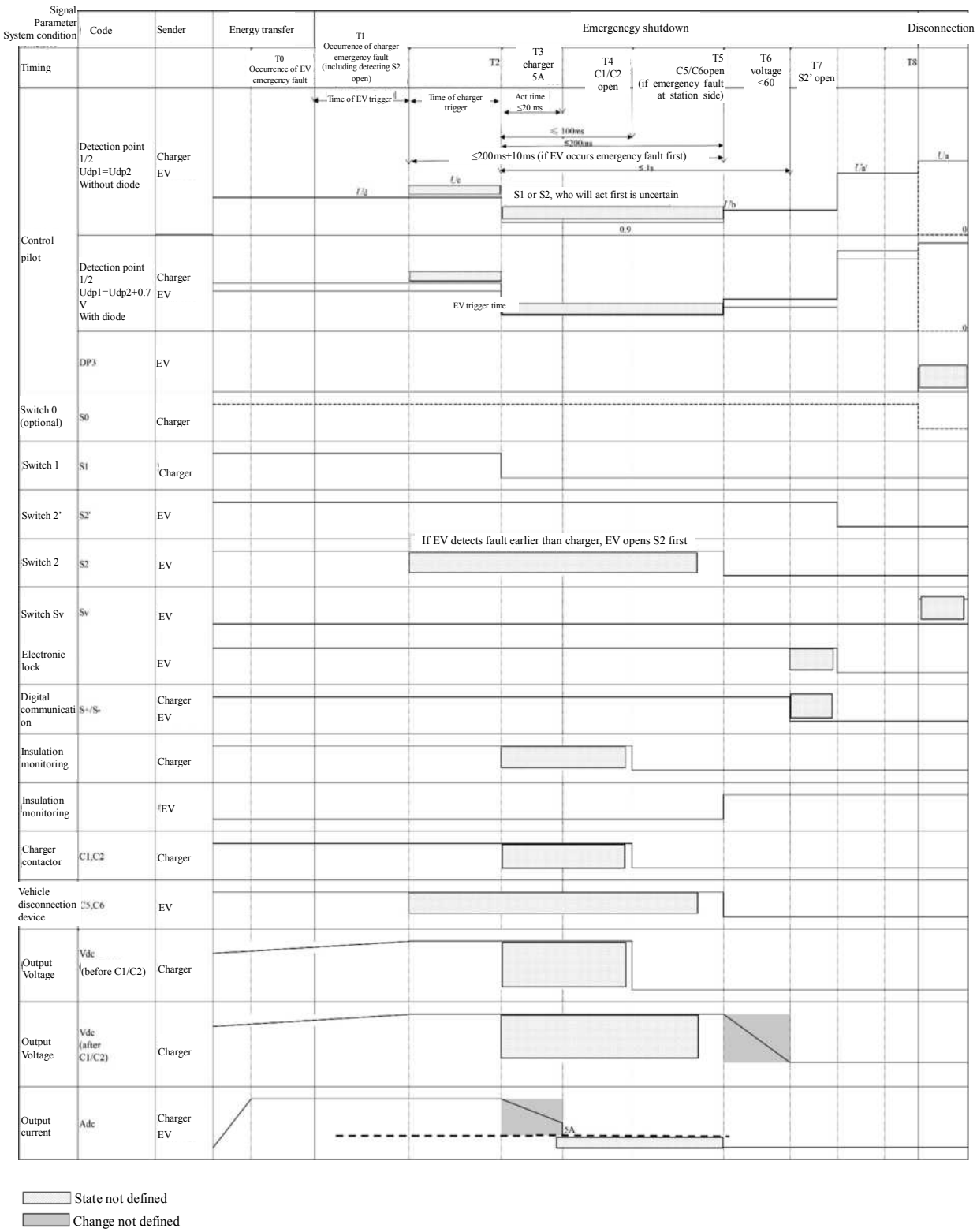

NOTE The voltage values at the detection points Ua, Ua', Ub, Uc, Ud corresponds to voltage values under state A, state A', state B, state C, and state Dshown in Table C.2.

Figure C.5 –Timing diagram of DC charging control (Emergency shutdown)

The timing of charging connection control corresponding to Figure C.5 is shown in Table C.6.

Table C.6–Timing table of DC charging control (emergency shutdown)

T0	In the energy transfer stage, the electric vehicle detects the moment of an emergency situation. The list of emergency situations are shown in Tables C.15 and Tabke C.16
T0→T1	The trigger time of electric vehicles in emergency situations is shown in Table C.16. For the charger, the vehicle controller disconnecting switch S2 is also an emergency situation
Tl→T2	The triggering time of the charger for emergency situations is shown in Table C.15
T3	The device controller reduces the current to 5A or below. The Act time shall comply with the provisions of Table C.15
T4	The device controller disconnects contactors C1 and C2. (T4-T2) complies with the provisions of Table C.15
T5	C5 and C6 disconnects at T5 if not disconnecting before. Electric vehicle starts internal insulation monitoring
T6	Confirm that the voltage of the DC power supply circuit between DC+ and DC -, between DC+ and PE, and between DC- and PE at the vehicle coupler drops below 60 V DC
T7	Switch S2'can disconnect At the latest, the connection device disconnects at T8. The voltage at detection point 1 is 10.8 V. T7 is the last moment when the electronic lock is opened and also the last moment when communication ends
T8	The charging connection device disconnects. Sv returns to its initialization state. The voltage at detection point 1 is 12 V, and the voltage at detection point 2 is 0 V

C.7 Charging safety requirements

C.7.1 Locking function

After confirming that the vehicle coupler is fully connected, the electronic lock can be activated for locking. The electronic lock can be unlocked during the charging reservation stage. From the self check stage until the energy transfer stage, electric vehicles shall ensure that the electronic lock is reliably locked. After the shutdown is completed and the vehicle coupler voltage drops below 60V DC, the electronic lock can be unlocked.

C.7.2 Contact adhesion

The charger shall perform contact non action detection after C1 and C2 are closed, and contact adhesion detection after C1 and C2 are disconnected. When any abnormality is detected in the main contact of a contactor, the charger shall trigger an error shutdown or not allow charging and issue an alarm message.

Electric vehicles shall undergo contact non action detection after C5 and C6 are closed, and contact adhesion detection can be performed when C5 and C6 are disconnected and C1 and C2 are not closed. When any abnormality is detected in the main contact of a contactor, the electric vehicle shall not be allowed to charge and issue an

Internal use only, not for resale or public post.

alarm message. At the end of charging, the vehicle controller shall disconnect C1 and C2 before performing adhesion detection.

C.7.3 Insulation monitoring (IMD)

C.7.3.1 Insulation monitoring of DC power supply circuits

C.7.3.1.1 Basic requirements

The charger shall detect symmetrical and asymmetrical earthing faults between the DC power supply circuit and the charger casing, as well as between the electric vehicle charging circuit and the vehicle chassis (energy transfer stage). Taking the bridge insulation detection circuit as an example, the detection of symmetrical earthing faults can be achieved by adding S_{IMD} switch at bridge circuit detection circuit (see Figure C.6).

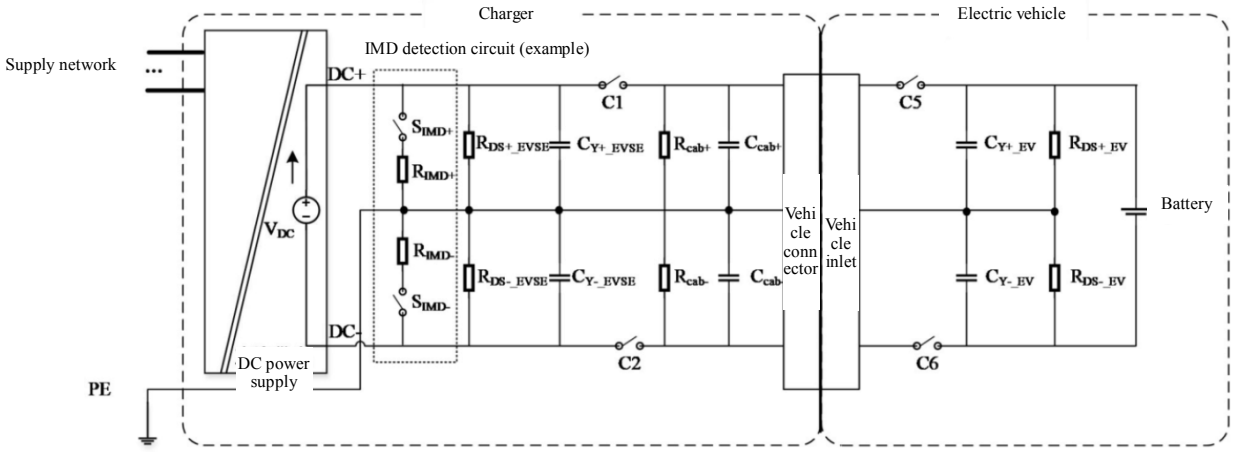

Key

DC+	- Posivie of DC supply circuit;
DC -	- Negative of DC supply circuit;
C1, C2	- DC power supply circuit contactor inside chargers
R_{IMD+}, R_{IMD-}	- IMD resistance inside charger;
S_{IMD+}, S_{IMD-}	-IMD circuit switch inside charger;
R_{DS+_EVSE}, R_{DS-_EVSE}	- Resistance inside the charger;
C_{Y+_EVSE}, C_{Y-_EVSE}	- Y capacitor of charger;
R_{cab+}, R_{cab-}	- Resistance inside cable assembly;
C_{cab+}, C_{cab-}	- Capacitance inside cable assembly;
C5, C6	- Vehicle disconnection device inside electric vehicles;
C_{Y+_ev}, C_{Y-_EV}	- Y capacitor of EV;
R_{DS+_EV}, R_{DS-_EV}	- Resistance insideEV.

Figure C.6 - Schematic diagram of earthing fault detection circuit

Except during the symmetrical earthing faults detection period, the insulation monitoring device of the charger shall always be in balance bridge mode, that is, it is not allowed to disconnect either side or both sides of the balance bridge resistance at the same time.

Internal use only, not for resale or public post.

In the energy transfer stage, the charger shall undergo at least one symmetrical earthing fault detection.

When the vehicle connector is fully connected to the vehicle inlet, the insulation monitoring device inside the electric vehicle shall not interfere with the operation of the earthing fault detection circuit of the charger.

In the power supply mode (optional function) and energy transfer stage, when the charger detects a earthing fault, it shall trigger an error shutdown within 10 seconds; In other stages (when C5 and C6 are not closed), when the charger detects a earthing fault, switch S1shall be disconnected, and it is not allowed to enter the energy transfer stage;

The charger shall monitor the voltage of the DC power supply circuit DC+to PE and DC- to PE in real-time. When it detects that the voltage exceeds its possible voltage range of ± 50 V DC, an error shutdown shall be triggered within 1 second.

The design of the earthing fault detection circuit shall comply with the provisions of Table C.7

Table C.7 - Requirements for earthing fault detection circuit

Item	Requirements
Test voltage range[a]	200 V~500 VDC or 200 V~750 VDCor 200 V~1 000 VDCor 500 V~1 250 VDC
Test method	Ground fault detection (GFD) shall be carried out through neutral earthing, or by injecting DC pulse waves (the absolute value of peak voltage is less than or equal to safe extra-low voltage) into the DC power supply circuit for earthing fault detection (IMD)
Test performance	Within the output voltage range, the following requirements shall be met. When one of the following situations occurs, an error shutdown shall be triggered: – The insulation resistance between the DC power supply circuit and the outer casing, including the vehicle chassis, deteriorates to less than or equal to 100 Ω/V[b] or 100 k Ω (1000 V DC) but greater than 0 Ω; – 0 Ω resistance earthing occurs
Earthing fault test time	≤10 s[c]
Fault filtering time	≥0.2 s
Balance bridge resistance (R)[d]	≥150 kΩ

[a] The detection voltage range shall be consistent with the DC output voltage range of the charger.

[b] When the operating voltage is less than 60 V DC, anearthing fault assessment requirement of 100 Ω/V may not be used.

[c] The purpose is to prevent faults caused by short-term noise currents.

[d] The equipped detection resistance shall be able to limit the maximum earthing fault current to below 10 mA.

Internal use only, not for resale or public post.

C.7.3.1.2 Fault detection of earthing fault detection circuit (self diagnostic function)

The charger should be checked for the integrity of its earthing fault detection circuit during the period from the closure of switch S1 to the end of the self check detection state 3 of the charger. The charger should diagnose at least the following items:

- Detect whether the resistance K1MD is open or short circuited;
- Earthing fault detection circuit open circuit fault (such as earthing fault current detection resistor open circuit);
- Power line open circuit fault;
- Open circuit fault of protective earthing conductor;
- Control power supply voltage abnormal fault (including power line short circuit).

C.7.3.2 Insulation test of output circuit

During the self check phase, the charger shall apply insulation test voltage to the DC power supply circuit (from the inside of the charger to the outside of C5 and C6) to check for earthing faults and short circuits.

The insulation test requirements for the output circuit of the charger shall comply with the provisions in Table C.8.

Table C.8 - Insulation test requirements for output circuits

Item	Specification
Test method	Adopting short-circuit and earthing fault detection functions; Earthing fault detection shall be conducted through the entire charging process, including self-check of the charger, energy transfer stage, etc.
Test time	Insulation test shall be conducted before each charging start
Test voltage	The insulation test voltage during the self check stage of the charger is the smaller of the maximum allowable total charging voltage of the vehicle and the maximum charging voltage of the charger in the parameter negotiation. When the voltage is below 500 V DC, the test voltage shall be 500 V DC
Apply test voltage cycle	Longer than the "misoperation prevention time" (this does not refer to the insulation test time, but to the time it takes to maintain the test voltage after the applied voltage reaches the test voltage)
Process	Shall comply with the provisions of C.4.5

Internal use only, not for resale or public post.

Fault diagnosis (insulation decerease)	Before self check stage, the impedance judgment threshold (insulation decrease) between DC+and DC- in the DC power supply circuit of the charger shall be less than 20 kΩ. Charger manufacturers can define a threshold of less than 20 kΩ. When the actual detected insulation resistance is less than the manufacturer's defined threshold, the charger shall trigger an error shutdown
Interruption time for earthing fault detection	To avoid false inspection caused by the influence of stray capacity inside electric vehicles, earthing fault detection shall be temporarily interrupted during the following time periods: – During the self check phase, the output voltage of the charger reaches the test voltage for 0.5 seconds. – At the end of the energy transfer phase, the current from the DC output circuit ≤5 A to C1 and C2 disconnected

C.7.4 Relief function

After the self check stagee is completed, the charger shall promptly relieve the charging output voltage to avoid voltage shocks to the battery load in the energy transfer stage.

After the energy transfer stage is completed, the charger shall promptly relieve the charging output voltage to avoid electric shock injuries to operators.

The parameter selection of the relief circuitrelieve ensure that the output voltage drops below 60 V DC within 1 second after closing the relief circuit switch.

C.7.5 Starting current limit

The charger should have a starting current limiting function, using one of two schemes: anti backflow diode and bypass pre charging circuit. During the charging phase, after the electric vehicle closes C5 and C6, the charger should detect the battery voltage and determine that this voltage should meet the requirements of C.4.7 before proceeding with pre charging according to one of the following schemes.

- Anti backflow diode scheme: After the charger detects that the battery voltage is normal, it adjusts the output voltage to be 1 V-10 V DC lower than the current battery side voltage, and then closes C1 and C2 to conduct the DC power supply circuit.

  NOTE The selection of the output voltage value of the charger during pre charging needs to consider its output setting error and measurement error.

- One side pre charging circuit scheme: After the charger detects that the battery voltage is normal, it first enables the pre charging circuit and controls the impulse current to be less than 20 A peak. After completing the pre charging, it then conducts the DC power supply circuit.

If the charger detects abnormal voltage in the vehicle power supply circuit, the equipment controller should disconnect switch S1 and not allow entry into the energy transfer stage (specific requirements should meet C.4.10.1).

Internal use only, not for resale or public post. www.gbstandards.org

C.7.6 Charging control and monitoring

C.7.6.1 Basic requirements

In the energy transfer stage, both the charger and electric vehicle shall monitor the voltage and current values at the vehicle coupler in real time. If both parties need to exchange measurement values, the measured voltage value sent by the device controller shall be the corrected value of the measured value at the vehicle coupler, taking into account the voltage drop caused by cable length, cable impedance, and temperature rise. The vehicle controller can evaluate the voltage and current values it measures against the voltage and current values sent by the device controller. Based on the comparison results, if the calculated difference is higher than the set value of the electric vehicle, the vehicle controller can determine that a fault has occurred and stop charging. The target and measurement values sent by the vehicle controller shall be equivalent to the target and measurement values at the vehicle coupler.

C.7.6.2 Charging pause and recovery

In the energy transfer stage, both the charger and electric vehicle can initiate a pause. At the beginning of the pause, the charger shall confirm that the charging current has dropped to 5A or below before disconnecting C1 and C2, and activate the relief circuit to reduce the voltage at the front end of the contactor to below 60 V DC. During the pause process, the electric vehicle shall maintain C5 and C6 in a closed state, continuously measure the voltage at detection point 2, and ensure that the electronic lock is securely locked. When the charger detects the disconnection of C5 and C6 during the pause process, it sends a termination message and disconnects switch S1, and it is not allowed to enter the energy transfer stage again. When the pause ends and both parties allow charging, the charger the S1 adjust the output voltage to the current voltage of the vehicle coupler minus 1 V to 10 V DC, then close C1 and C2 to make the DC power supply circuit conductive, and both parties shall re-enter the energy transfer stage.

C.7.6.3 Output overvoltage protection

In the energy transfer stage, the charger shall have an output overvoltage protection function.

When the device controller detects that the voltage at the vehicle coupler exceeds [maximum allowable charging voltage of the vehicle+limit impulse voltage value$V_{overvol}$]

- Overvoltage duration$T_{overvol}$≥ 400 ms, the charger shall trigger an error shutdown within Is;
- Overvoltage duration 200 ms ≤$T_{overvol}$<400 ms, continuing charging or the charger shall trigger an error shutdown within 1 second;
- Overvoltage duration: $T_{overvol}$<200 ms, continue charging.

The charger shall limit the impulse voltage value $\Delta U_{overvol}$and duration $T_{overvol}$ during overvoltage protection to meet the provisions of Table C.9.

Table C.9 - Overvoltage protection (error shutdown) and duration

Rated output voltage of chargerV	Maximum overvoltage exceeding overvoltage threshold$\Delta U_{overvol}$ V	Maximum duration$T_{overvol}$ S
≤1 000	15	0.4
≤1 250	20	

When the device controller detects that the voltage at the vehicle coupler exceeds the limit value specified in Table C.10, the charger sall trigger an emergency shutdown within 10 ms.

Table C.10 – Overvoltage protection thresholds (emergency shutdown)

Maximum allowable charging voltage of the vehicle U V	Charging voltage when the charger triggers an emergency shutdown V
U≤500	550
500<U≤750	825
750<U≤850	935
850<U≤1 000	1 100

In the energy transfer stage, when there is a sudden drop in load due to a fault (such as load shedding), the instantaneous output voltage value should not exceed the larger value of position A (see Figure 7) (110% of the charging target voltage) and (charging target voltage+50 V DC), and there should be no dangerous situation.

NOTE The transient voltage that possibly occur continuously for up to 10 ms when the load drops suddenly is ignored.

C.7.6.4 Output overcurrent protection

When one or more of the following situations last for 500 ms, the charger shall trigger an emergency shutdown within the following 500 ms. The test shall be conducted under resistive load conditions:

- The current value exceeds 120% of the maximum output current of the charger;
- The voltage value drops below 80% of the minimum output voltage of the charger.

When the output current is the following for T_d[$((\Delta I/current\ adjustment\ rage) \times 110\%)$ (when Td<1 s, duration is 1 s, when Td ≥l s, as calculated value)], the charger shall trigger an error shutdown within 500 ms:

- When the target current≥ 30 A, the output current exceeds 110% of the presenttarget current of the vehicle;
- When the target current< 30 A, the outut current exceeds (present target current of the vehicle+3 A).

When an electric vehicle detects an overcurrent fault, it should send a termination message and disconnect C5 and C6 when the current at the vehicle coupler drops to 5 A or less (wait for a maximum of 5 seconds).

C.7.7 Galvanic seperation

The A side and B side of the charger are electrically isolated, providing a non direct earthing power source to power the electric vehicle.

When there is a earthing fault, short circuit, or overcurrent abnormality in the DC power supply circuit, the charger shall be able to detect the fault and stop charging, and the control circuit shall be able to maintain control functions such as control, communication, protection, and monitoring of the electric vehicle.

C.7.8 X/Y capacitor

C.7.8.1 Requirements for chargers

Before receiving a charging current greater than or equal to 1 A, the impedance between DC+ andDC- in the DC power supply circuit of the charger from the anti reverse diode to the vehicle connectorshall meet the following requirements:

- X capacitor: ≤ 1/μF;
- Resistance: ≥ 40 kΩ.

In addition, the charger shall meet the requirements of Table C.11 for the Y capacitor in the DC output circuit.

Table C.11 – Y capacitor requirements for charger

Rated DC output voltage of charger Un	Y capacitor requirements
Un≤500 V	The total capacitance of the DC power supply circuit between DC+and PE, as well as between DC- and PE, at each vehicle coupler shall not exceed 0.5 μF
500V＜Un≤1 250 V	Meet one of the following conditions: - In the energy transfer stage, the total capacitance stored in the DC power supply circuit between the charger and the electric vehicle power battery, DC+and PE, as well as between DC- and PE, shall not exceed 0.2 J at their maximum operating voltage; - The DC power supply circuit of the charger adopts double insulation or reinforced insulation measures

C.7.8.2 Requirements for Vehicles

Electric vehicles should meet the provisions of 5.1.4.4 in GB 18384-2020.

C.7.9 Thermal management system for cable assembly

C.7.9.1 Service scenarios

Manufacturers should decide whether to configure a thermal management system based on the installation environment and operating conditions.

C.7.9.2 Temperature monitoring function

In the energy transfer stage, when the temperature measured by the thermal sensing device inside the cable assembly exceeds the temperature intervention value, the charger shall reduce the charging current to the maximum operating current of non cooling conditions or trigger an error shutdown within the time declared by the manufacturer. When the temperature rise rate exceeds the temperature rise rate intervention value. The charger shall reduce the charging current to the maximum operating current under non cooling conditions or trigger an error shutdown within the time declared by the manufacturer.

NOTE The temperature intervention value, temperature rise rate intervention value, and maximum operating current under non cooling conditions are defined in GB/T 20234.4-2023.

C.7.9.3 Cooling function

The charger can control the temperature of the charging cable assembly and has the function of limiting the temperature rise of the cable assembly and the terminals inside the vehicle connector (such as air cooling, liquid cooling, and cooling devices).

When the cooling system fails, the charger shall be able to automatically limit the charging current to not exceed the rated continuous current of the vehicle coupler without a cooling system.

C.7.10 Overload current and short circuit protection

C.7.10.1 General

The charger shall have overload and short circuit protection functions. The charger and electric vehicle shall have the function of preventing overload and short circuit in each circuit to protect each other, and shall have protection coordination to protect the charging cable and control circuit (such as control pilot circuit, communication circuit) from the hazard of short circuit and overload current.

The protective fuse shall select suitable I^2t according to the maximum charging current of the charger and in coordination with the protective fuse, cable assembly, and charging cable inside the electric vehicle.

C.7.10.2 Safety requirements

C.7.10.2.1 Short circuit current protection

The charger shall have means to protect itself and the vehicle, and prevent problems

Internal use only, not for resale or public post.

such as short circuits in the AC power supply circuit. In addition, the design of the DC output circuit and exposed live parts of the charger shall be able to prevent short circuits caused by water leakage and foreign objects entering people.

Once a short circuit occurs between DC+ and DC- in the DC power supply circuit, the charger shall immediately interrupt the short-circuit current through overcurrent protection devices (such as current limiting fuses and/or electronic switches). The overload current shall be interrupted by an electronic switch when it reaches the short-circuit current protection threshold specified by the charger manufacturer, as specified in C.7.10.2.2.

In the case of a short circuit between DC+ and DC- in the charging connection device, the charger shall limit the maximum peak current to 10 kA or less.

C.7.10.2.2 Overload current protection

In some cases, the cable assembly in the DC power supply circuit of the charger and the charging cables inside the electric vehicle cannot be protected by the charger protection fuse.

C.7.10.2.3 Protective Fuses

The charger shall be equipped with overcurrent protection devices such as protective fuses (passive components) in the DC output circuit (including cable assembly) to protect itself and the circuit between the incoming line of the electric vehicle and the vehicle fuse from being affected by the short circuit between DC+ and DC- in the circuit.

The requirements for protecting fuses (if used) shall comply with the provisions of Table C.12.

Table C.12 Specifications of Protective Fuses

Item	Requirement
Electrical characteristics	Quick fusing
Rated current	Greater than the maximum charging current of the charger
Rated voltage	Greater than the maximum charging voltage of the charger

C.7.11 Power outage protection

When the DC power supply circuit or control circuit loses power due to power outage or other reasons, the charger shall disconnect S1, C1, and C2 within 1 second, and reduce the vehicle coupler voltage to below 60 V DC or equivalent stored energy less than or equal to 0.2 J.

C.7.12 Insulation performance and protective measures

The insulation performance and protective measures of chargers with a maximum charging voltage greater than 500 V DC shall comply with the provisions of Table C.13. Chargers and electric vehicles shall provide additional protection to avoid situations

Internal use only, not for resale or public post.

where basic protection fails and fault protection regulations fail simultaneously. For example, in the energy transfer stage, due to cable assembly damage, high-voltage hazardous live parts are exposed (assuming multiple failures occur), and are intentionally or unintentionally touched by personnel standing on the ground, It shall not exceed the C1 limit specified in Figure 20 of GB/T 13870.2-2016 and Figure 22 of GB/T 13870.1-2022.

Table C.13 - Minimum requirements for insulation performance/protective measures of chargers

Item	Insulation performance/protective measures
Input and output circuits	Double insulation or reinforced insulation
Input circuit and safety Extra-low voltage (SELV)	Double insulation or reinforced insulation
Output circuit and safety Extra-low voltage (SELV)	Double insulation or reinforced insulation
Input circuit and protective conductor	Basic insulation
Output circuit and protective conductor	Basic insulation

C.7.13 Shutdown function

C.7.13.1 Normal shutdown

Normal shutdown refers to the sending of a termination message by an electric vehicle, charger, or user without any faults, and the specific execution action shall comply with the provisions of C.4.9.

C.7.13.2 Error shutdown

Error shutdownrefer to when an electric vehicle or charger detects a fault (such as output overvoltage, output overcurrent, battery overvoltage, individual battery overvoltage, individual battery overheating, connector overheating, communication interruption, insulation fault, voltage mismatch, current mismatch, etc.), the error shutdown shall be triggered within the specified time, and the specific action shall comply with the provisions of C.4.10.

The error shutdown requirements for charger shall comply with the provisions of Table C.14, and the fault items are not limited to those listed in the table. The shutdown requirements for electric vehicles are customized by the manufacturer. When conducting consistency testing on the error shutdown of the charger, the detection mechanism shall check the response time of the error shutdown, including the complete time of triggering and action.

Table C.14 - Requirements for charger error shutdown

Fault item	Trigger time	Act time (maximum time for current to drop to 5 A or below/rate of current decrease) [a]	Act time [coupler voltage less than 60 V DC (between DC+ and DC-, between DC+ and PE,

				between DC- and PE)][a,b]
Charging process	Communication timeout (with vehicle)	—[c]	Output current <200 A，within 2 s; Output current ≥200 A，at least 100 A/s	≤3 s
	Other faults (charger side)	Refer to manual or relevant standards		
Power supply mode (optional), energy transfer stage	Insulation fault (insulation resistance to ground)	≤10 s		
	Insulation fault (voltage to ground exceeding limit)	≤1 S		
Energy transfer stage	Output overcurrent protection[d]	≤500 ms		
	Output overvoltage protection[e]	≤1 S		
	Press the emergency shutdown switch (if any)	≤1 S		
	The temperature of the cable assembly temperature collection unit exceeds 90 ℃ or the temperature rise exceeds 50 K (at an ambient temperature of 40 ℃)	Custom[g]		
	The temperature rise rate of cable assembly exceeds the manufacturer's specified limit	Custom[g]		
Non energy transfer stage	Insulation fault	Custom[g]	—[f]	—[f]
Before self check stage, pre charging	Vehicle DC circuit voltage abnormal	Custom[g]	—[f]	—[f]
Before energy transfer	C1 and/or C2 adhesion detected	Custom[g]	—[f]	—[f]
	Short circuit fault detected	Custom[g]	—[f]	—[f]

[a]Start timing from confirming the fault.

[b]Disconnect the charger contactors C1 and C2.

[c]Refer to GB/T 27930-2023 for the communication timeout.

[d]When the output current is as follows and lasts for a duration of T_d [$(\Delta I/charging\ rate) \times 110\%$(when Td<1s, duration time is 1s, when Td≥1 s, as calculated value)] , the charger shall trigger an error shutdown within 500 ms:

- Whentarget current ≥ 30 A, the output current exceeds 110% of the present target current of the vehicle;
- When target current< 30 A, the output current exceeds [vehicle present target current+3) A.

[e]When the device controller detects that the voltage at the vehicle coupler exceeds [maximum allowable total charging voltage of the vehicle+limit impulse voltage value $V_{overvol}$]:

- When the duration of overvoltage $T_{overvol}$≥ 400 ms, the charger shall trigger an error shutdown within 1 second;
- When the duration of overvoltage is 200 ms ≤$T_{overvol}$＜400 ms, continue charging or the charger shall triggeran error shutdown within 1 second.

Internal use only, not for resale or public post. www.gbstandards.org

[f]The charger shall not be allowed to charge.
[g]Manufacturers can customize it.

C.7.13.3 Emergency shutdown

Emergency shutdownrefer to in the energy transfer stage, when an electric vehicle or charger detects a serious internal fault (such as abnormal CC1 connection, loss of protective earthing continuity, emergency shutdown, disconnection of charger S1, disconnection of vehicle S2, etc.), the emergency shutdown shall be triggered within the specified time, and the specific action shall comply with the provisions of C.4.11.

The emergency shutdown requirements of the charger shall comply with the provisions of Table C.15, and the fault items are not limited to those listed in the table. When conducting consistency testing on the emergency shutdown of the charger, the testing agency shall check the response time of the emergency shutdown, including the complete time of triggering and action.

Table C.15 - Emergency shutdown requirements for chargers

<table>
<tr><th>Fault item</th><th>Trigger time</th><th>Act time (time when the current drops to 5A or below and S1 is disconnected)[a,b]</th><th>Act time (time when C1 and C2 disconnected)[a]</th><th>Act time [coupler voltage less than 60 V (between DC+ and DC-, between DC+ and PE, between DC- and PE)] [a,b]</th></tr>
<tr><td>CC1 broken wire/broken pin</td><td rowspan="3">≤10 ms</td><td rowspan="7">≤20 ms</td><td rowspan="7">≤100 ms</td><td rowspan="7">≤1 S</td></tr>
<tr><td>PE broken wire/broken pin</td></tr>
<tr><td>Vehicle disconnects switchS2</td></tr>
<tr><td>Receive vehicle electronic lock unlocking information</td><td>≤1 S</td></tr>
<tr><td>Hardware remote signaling faults detected (such as access control, water immersion, etc.)</td><td>≤70 ms</td></tr>
<tr><td>Short circuit of DC power supply circuit</td><td>≤1 S</td></tr>
<tr><td>Output overcurrent protection[d]</td><td>≤500 ms</td></tr>
<tr><td>Output overvoltage protection[e]</td><td>≤10 ms</td></tr>
</table>

[a] Start timing from confirming the fault or monitoring that the voltage at detection point 1 is not in the state D specified in Table C.2.
[b] If an emergency shutdown fault occurs during the non energy transfer stage, it is not necessary to determine the current drop requirement.
[c]Method of disconnecting the charger contactors C1 and C2 can be taken.
[d] When one or more of the following situations lasts for 500 ms continuously, the charger shall trigger an emergency shutdown within the following 500 ms:
- The current value exceeds 120% of the maximum output current of the charger;
- The voltage value drops below 80% of the minimum output voltage of the charger.

[e] When the device controller detects that the voltage at the vehicle coupler exceeds the limit value specified in Table C.10, the charger shall trigger an emergency shutdown within 10 ms.

The emergency shutdown requirements for electric vehicles shall comply with the provisions of Table C.16. The fault items are not limited to those listed in the table. When conducting consistency testing on emergency shutdowns of electric vehicles, the testing agency shall check the response time of emergency shutdowns, including the complete time of triggering and action.

Table C.16 - Emergency shutdown requirements for electric vehicle

Fault item	Trigger time (including switch S2 disconnection time)	Act time (time when C5 and C6 disconnected)[a]	Act time [coupler voltage less than 60 V (between DC+ and DC-, between DC+ and PE, between DC- and PE)] [a,b]
CC1 broken wire/broken pin	≤ 10 ms	≤ 200 ms	≤ 1 sor custom[c]
PE broken wire/broken pin			
Charger disconnects witch S1			
Other faults (vehicle side)	Custom	≤ 210 ms	

[a]Start timing from confirming the fault or monitoring that the voltage at detection point 2 is not within the state D range specified in Table C.2.

[b]Method of disconnecting C5 and C6 can be taken.

[c] Can be customized by the manufacturer.

Annex D
(informative)
Voltage adaptive switching of vehicle power supply circuit

D.1 Overview

This Annex applies to DC charging systems that use Annex B control pilot function.

D.2 Charging control process

D.2.1 For electric vehicles and chargers with this function, the configuration stage is shown in D.2.2, and the remaining stages are consistent with Annex B.

D.2.2 During the configuration phase, when the vehicle controller and device controller receive the maximum output capacity parameter of the charger, the vehicle controller determines whether to perform voltage adaptive switching. When electric vehicles do not require voltage adaptive switching, they continue to charge at the current voltage without updating the vehicle charging parameters. When electric vehicles need to adopt voltage adaptive switching, the vehicle power supply circuit voltage adaptive switching is carried out, and the updated charging parameters at position A (see Figure 7), including the maximum allowable charging current, maximum allowable total charging voltage, and the current voltage measurement value of the vehicle coupler, are notified to the charger. When electric vehicles are allowed to charge, close C5 (or C5') and C6 (see Figure D.1) to make the vehicle's power supply circuit conductive. When the device controller detects that the current voltage of the vehicle coupler is normal (confirm the voltage at the outer end of the contactor: (1) the error range between the measured voltage of the vehicle coupler in the last communication message received is ≤ ± 5%, and (2) it is greater than the minimum charging voltage of the charger and less than the maximum charging voltage of the charger), adjust the output voltage to the vehicle coupler voltage minus 1 V to 10 V DC, and then close C1 and C2 to make the DC power supply circuit conductive.

D.3 Principle of voltage adaptive switching circuit

Electric vehicles with voltage adaptive switching circuits can achieve switching between two voltage levels (including one low voltage level and one high voltage level), and maintain a low voltage platform until receiving the maximum output capacity parameter of the charger. There are various technical solutions for implementing voltage adaptive switching circuits, such as using DC-DC boosters, changing the series parallel connection mode of batteries, etc. The schematic diagram of the circuit principle is shown in Figure D.1. If the vehicle power supply circuit requires the use of a DC-DC booster to raise the voltage to a high voltage level for charging, the electric vehicle gets ready for charging and complete pre charging before closing C5 and C6.

Internal use only, not for resale or public post.

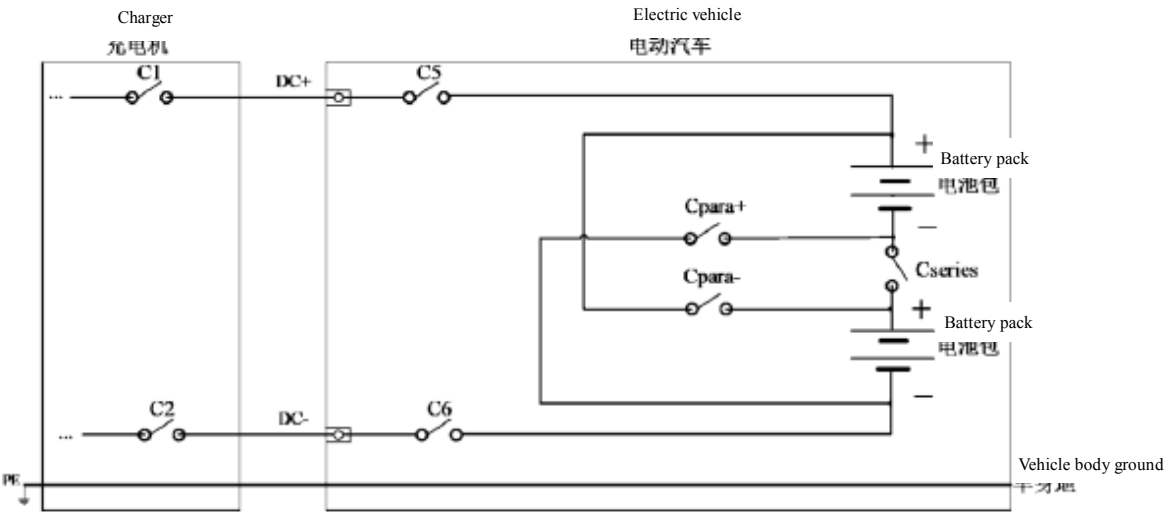

Figure D.1 - Circuit schematic diagram of charign voltage adaptive switching implementation method

Key

C1, C2 - DC power supply circuit contactor inside charger;

C5, C6 - Vehicle disconnection device inside the vehicle;

C_{series} - Battery series contactor inside vehicle;

C_{para+}, C_{para-} -Battery parallel contactors inside vehicle.

NOTE When the electric vehicle needs to be maintained at a low voltage level, $C_{para+}$and C_{para-} close, C_{series} disconnect, and the battery is in parallel; When an electric vehicle needs to increase its voltage to a high voltage level for charging, C_{series} closes, $C_{para+}$and C_{para-} disconnect, and the battery is connected in series.

a) Battery series parallel connection method

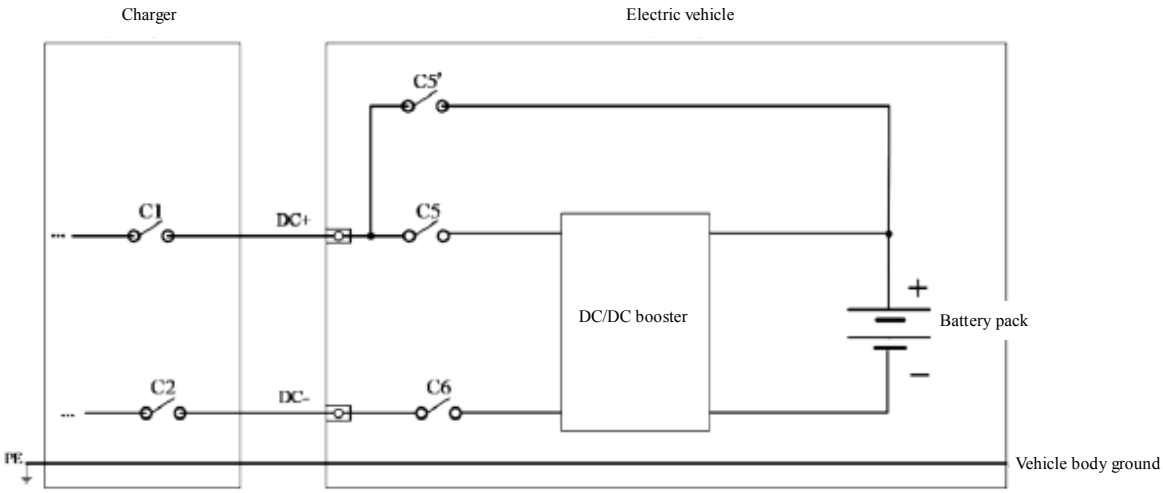

Key

C1, C2 - DC power supply circuit contactor inside charger;

C5, C6 - Vehicle disconnection device inside vehicle;

C5' - bypass contactor for C5 inside vehicle;

NOTE When an electric vehicle uses a DC-DC booster, close C5 and C6 to connect the DC power

supply circuit of the charger to the internal DC-DC booster of the vehicle; When electric vehicles do not require the use of DC-DC boosters, close C5'and C6 to directly connect the charger to the battery pack.

b) DC-DC booster method

Figure D.1 - Schematic diagram of circuit principle for charging voltage adaptive switching (continued)

D.4 Charging safety requirements

D.4.1 Electric vehicle

In the energy transfer stage, electric vehicles using non electrically isolated DC-DC boosters continuously monitor the voltage values between the DC+ and PE, as well as between DC- and PE of vehicle coupler (position A), in addition to insulation monitoring (IMD).

Electric vehicles that adopt the method of changing the series parallel connection of batteries not only undergo adhesion detection on C5 and C6, but also continuously conduct adhesion detection on the battery series parallel contactors C_{series}, C_{para+}, and C_{para-}.

D.4.2 Power supply equipment

If the charger is equipped with SPD in the DC power supply circuit, its output voltage complies with 11.7.2.

D.4.3 Possible faults and countermeasures

During the charging preparation process, before the electric vehicle closes C5 (or C5') and C6, if the vehicle controller detects contactor adhesion in the voltage switching circuit, abnormal voltage at the internal terminals of C5 (or C5') and C6, the vehicle controller cannot close C5 (or C5 ') and C6, and sends a "vehicle charging termination" message to the charger.

NOTE Voltage abnormity refers to an error of more than ± 5% between the battery side voltage of C5 (or C5') and C6 and the battery voltage value in the last frame of the vehicle charging parameter report.

In the energy transfer stage, if the voltage switching circuit inside the electric vehicle experiences contactor adhesion, or the voltage at the vehicle coupler (position A) exceeds the maximum charging voltage of the charger, the electric vehicle sends a "vehicle charging termination” message to the charger and disconnects C5 (or C5 ') and C6 within 300 ms.

For vehicles using non electrically isolated DC-DC boosters, in the energy transfer stage, if the voltage of DC+to PE or DC - to PE at the vehicle coupler (position A) exceeds the maximum output voltage of the charger, the electric vehicle sends a "vehicle suspension charging message" to the charger and disconnects C5 and C6 within 300 ms.

Internal use only, not for resale or public post.

Annex E
(informative)
V2G DC charging and discharging technology scheme using the charging connection device specified in GB/T 20234.4

E.1 Overview

This Annex applies to V2G DC charging and discharging equipment using GB/T 20234.4 charging connection devices (hereinafter referred to as "bi-directional charger")and electric vehicles with bi-directional charging functions. The communication protocol between the bi-directional charger and the electric vehicle complies with the relevant provisions of Class B systems in GB/T 27930-2023.

E.2 Safety and protection requirements on the supply network side

E.2.1 The bi-directional charger has the self-protection ability during supply network faults and recovery processes.

E.2.2 The earthing method of the bi-directional charger coordinates with the earthing method on the grid side, and meet the requirements of personal equipment safety and protection coordination.

E.2.3 When the bi-directional charger is connected to the supply network, it is easy to install and operate at the network connecting point, and has obvious disconnection indication and the ability to disconnect fault current switch.

E.2.4 The lightning protection and earthing of the bi-directional charger comply with GB 14050 and DL/T 621.

E.2.5 The relay protection and safety automatic device of the bi-directional charing system shall meet the requirements of reliability, selectivity, sensitivity, and rapidity, and its technical conditions complies with GB/T 14285 and DL/T 584.

E.2.6 The bi-directional charger has functions such as voltage protection, frequency protection, network connection synchronization, and island protection on the network side.

E.3 Bi-directional charing system configuration

The schematic diagram of the basic scheme of the DC V2G bi-directional charging safety protection system that does not use an adaptor and supports bi-directional charging is shown in Figure E.1. The bi-directional charger shall have a bypass R_{pre} and S_{pre} combination (supporting unidirectional and bi-directional charging), discharge function, and insulation monitoring device (IMD). The relief circuit and insulation detection circuit shall have switching function. During the entire bi-directional charging process, the device controller can monitor the status of DC contactors C1 and C2, switch S0 (optional, closed after authentication (such as card swiping); If not availalbe, it is equivalent to a normally closed state,taking S0 is normally closed as an example in this Annex), switch S1 state (initialization state is open); The vehicle controller can monitor the state of the vehicle disconnect devices C5 and C6, switch S2 (initialization status is disconnected),

Internal use only, not for resale or public post.

S2'(optional, if configured, initialization status is disconnected), and Sv state (initialization status is customized by the manufacturer). Switch S1 and S2 serve as hardware switches to switch between charging and discharging states (allowing bi-directional charging and not allowing bi-directionalcharging). Galvanic seperationis equipped between the AC supply network input of bi-directional charger and the DC power supply circuit.

The conditions for electric vehicles to allow discharge are:

- The vehicle coupler is fully connected;
- Electronic lock is fully locked;
- No faluts after compleing self check of the bi-directional charger;
- The battery pack is in a discharge state;
- The supply network allows for discharge.

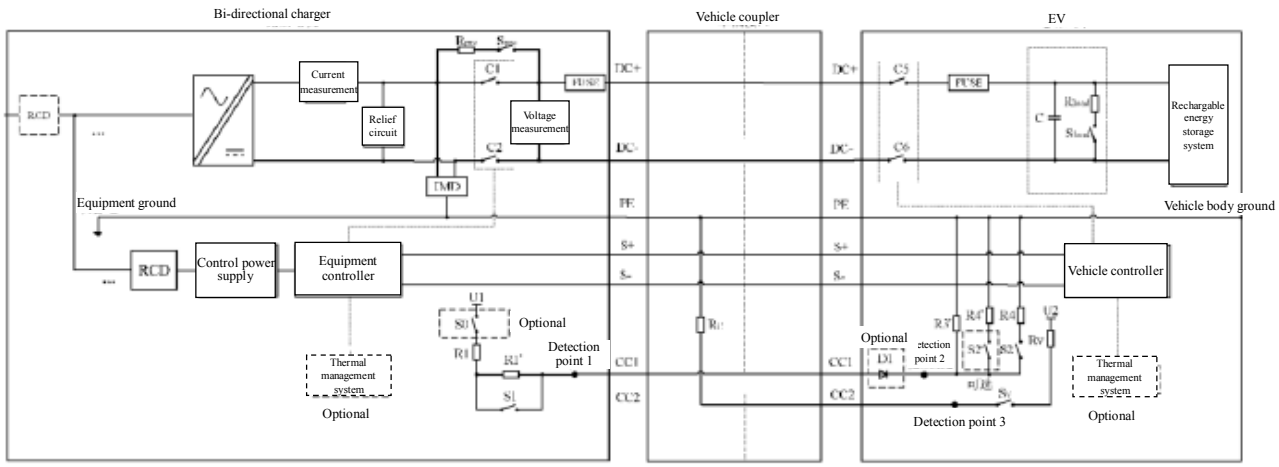

Key:

C1, C2	- DC power supply circuit contactor inside bi-directional charger;
R_{pre} and S_{pre}	- Circuits inside bi-directional chargers, used for pre charging;
U1	- Control pilot pull-up voltage inside bi-directional charger;
R1, R1 '	- Resistance of the control pilot circuit insidebi-directional charger;
S0	- Control pilot circuit switch inside bi-directional charger, optional, closed after authentication (such as card swiping); If not availalbe, it is equivalent to normally closed state;
S1	- control pilot circuit switch inside bi-directional charger;
Rc	- Resistance of the control pilot circuit inside the vehicle connector, used for hardware version coding;
C5, C6	- Vehicle disconnection device;
C. Rload, Sload	-Circuits inside vehicle, such as load (air conditioning), battery heating, etc., defined by the vehicle manufacturer themselves;
R3', R4, R4', Rv	- Resistance of control pilot circuitinside vehicle;
D1	- Diode ofcontrol pilot circuit inside vehicle, optional, suitable for electric vehicles compatible with Europe/USA charger;

S2, S2'(optional), Sv - Control pilot circuit switch inside vehicle.

The charging and discharging DC power supply circuits can share or not share the same set of circuits.

The discharge function is not limited to the charging and discharging equipment itself, but can also be completed within the power unit.

The vehicle controller can be integrated into the battery management system.

The bi-directional charger can measure the current of the DC- circuit.

FUSE is used to avoid dangerous energy generated by short circuits on the vehicle battery side in the circuits inside the bi-directional charger. It can be installed in the DC- circuit of the bi-directional charger, the DC+circuit of the vehicle connector, and the DC- circuit.

NOTE The initial state of the switches Sv and S2'inside the vehicle in the figure is normally open.

Figure E.l - Schematic diagram of control pilot circuit for V2G discharge

E.4 Control pilot circuit parameters

The parameter values of the DC discharge control pilot circuit are shown in Table C.1.

E.5 DC V2G charging and discharging control process

E.5.1 Charging/discharging switching principle

During the charging and discharging process, seamless switching between charging and discharging in the energy transfer stage is not supported. After a single charging or discharging, the electric vehicle can enter a sleep state. At this time, the vehicle inlet cannot be unlocked, and switches S1 and S2 are both disconnected. Switch S2'is normally closed (for electric vehicles equipped with switch S2').

When it is necessary to switch between charging and discharging or wait for the supply network dispatch command, the bi-directional charger wakes up the electric vehicle through the closed switch S1 method, and at the same time begins to negotiate the communication version for the next charging or discharging.

The entire DC V2G charging and discharging process starts from the complete connection of the vehicle coupler until the vehicle connector is completely unplugged, and can include multiple charging and discharging. An example of the switching process is shown in Figure E.2.

Internal use only, not for resale or public post.

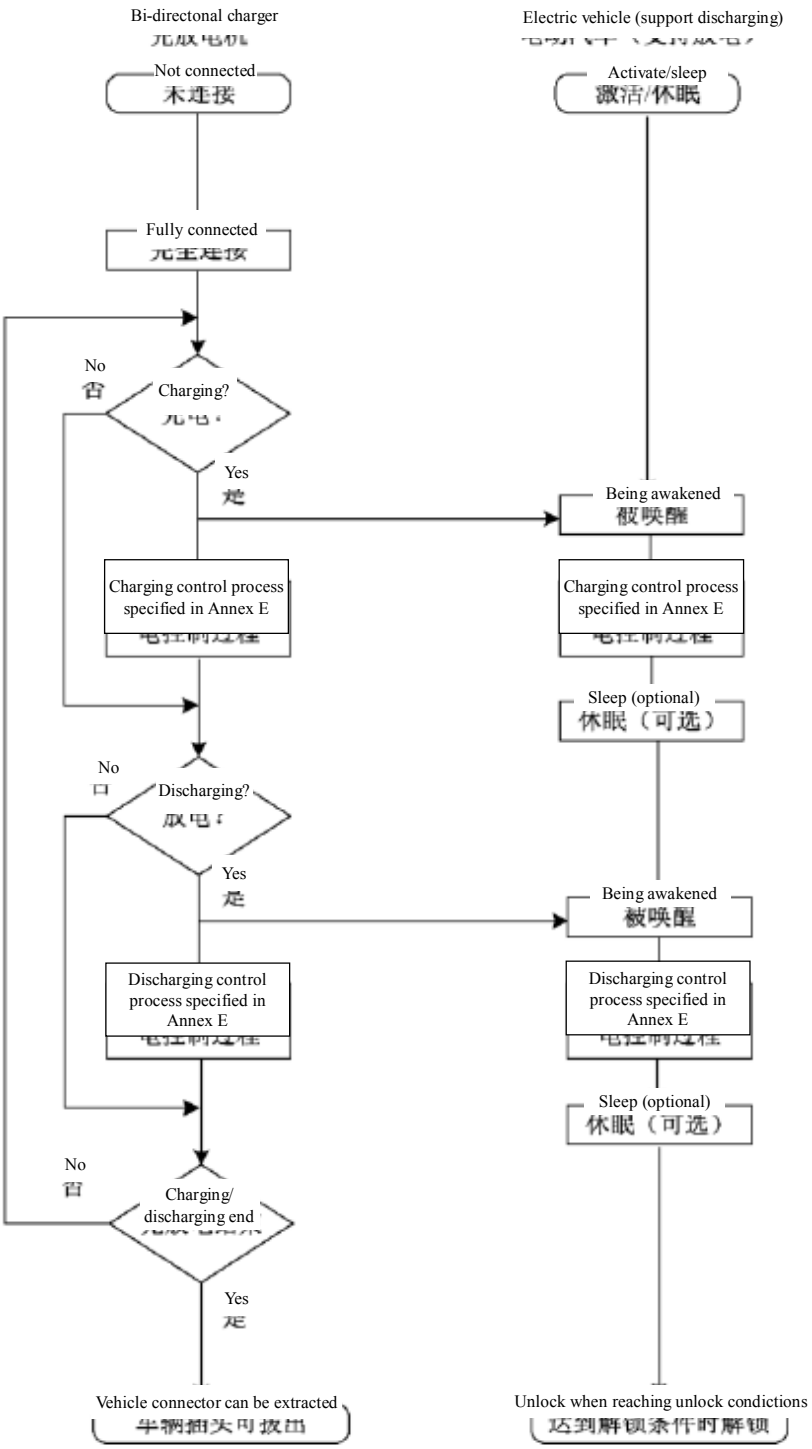

Figure E.2 - Example of charging/discharging switching process

E.5.2 Charging control process

The charging control process between the bi-directional charger and electric vehicles with charging and discharging functions is shown in C.4, C.5, and C.6.

E.5.3 Discharge control process

E.5.3.1 Vehicle being waken-up

When the electric vehicle enters a sleep state after a charge is completed, and when the bi-directional charger receives a network discharge scheduling command or reaches its own discharge conditions, the device controller closes switch S1 to wake up the electric vehicle and start data exchange. At this time, the voltage values of detection points 1 and 2 are all 8.73 V (see state C in Table C.2). Within 10 seconds after the switch S1 is closed, the electric vehicle is awakened, and the vehicle controller closes switch S2. At this time, the voltage values of detection point 1 and detection point 2 are both 5.60 V (see state D in Table C.2).

E.5.3.2 Self check stage

During the self check phase, the bi-directional charger performs contact adhesion detection and short circuit detection on the C1 and C2 of DC power supply circuits, as well as insulation monitoring inside the bi-directional charging equipment (including charging cables). The self check stage is shown in C.4.5.

E.5.3.3 Power supply mode (optional function)

Before the energy transfer stage, when the power battery state does not allow charging and requires power from the charger, the vehicle controller can negotiate the power supply mode function with the equipment controller. The power supply mode is shown in C.4.6.

E.5.3.4 Pre charging

When the power supply mode is not available, starting to enter the pre charging and energy transfer stage. When pre charging, the vehicle control device closes C5 and C6 to make the vehicle power supply circuit conductive; After the device controller detects that the current vehicle power supply circuit voltage is normal (confirming the voltage at the outer terminals of contactors C1 and C2: the error range with the communication message battery voltage is ≤ ± 5% and within the normal operating voltage range of the bi-directional charger), it first enables the pre charging circuit (close C2 and Sp_{re} switches), completes the pre charging, and then conducts the DC power supply circuit (close C1 again). In the entire process, control the peak impulse current less than 20 A.

E.5.3.5 Energy transfer stage

In the energy transfer stage, the vehicle controller sends real-time vehicle discharge target parameters to the device controller. When the device controller adjusts the charging current to decrease:when$\Delta I/dlmin \leq l$ s, adjusting the discharge current to be consistent with the command value within 1 second at most; When $\Delta I/dlmin > l$ s, adjusting the discharge current to match the command value within the longest time of $\Delta I/dlmin$ s (dlmin is the minimum discharge rate, default to 20 A/s). The device controller adjusts the discharge voltage and current in real-time based on the battery discharge target parameters and the command values of the superior platform or related systems. In addition, the vehicle controller and device controller send their respective state information to each other. During the entire energy transfer process and power supply mode, the bi-directional charger is responsible for monitoring the insulation performance of the DC power supply

Internal use only, not for resale or public post.

circuit to the ground.

Bi-directional charger manufacturers can customize the current adjustment rate when the current is increased and the current adjustment rate when the current is decreased, and inform electric vehicles through digital communication.

Before the end of the energy transfer phase, if no shutdown command is received or the charging and discharging process is stopped according to the strategy, both parties enter the normal ending stage. Otherwise, the equipment controller disconnects switch S1, and the electric vehicle disconnects switch S2 into sleep mode (the electronic lock may not be unlocked at this time).

E.5.3.6 Shutdown under normal conditions

E.5.3.6.1 Normal shutdownof bi-directional charger

When the device controller determines that the end conditions set by the operator have been met, the superior platform or relevant system has implemented a stop command, or received a stop message from the vehicle, the device controller sends a stop message. At the same time, within 5 seconds, the charging current is reduced to 5 A or less, and the contacts C1 and C2, switch S1 are disconnected. A relief circuit is also input to enable the voltage of DC power supply circuit between the DC+ and DC-, DC+ and PE, DC- and PE in the front and back ends of contactors C1 and C2 is less than 60 V DC. The relief circuit is physically separated from the strong current circuit.

E.5.3.6.2 Normal shutdownof electri vechicle

After the vehicle controller determines that the discharge end condition has been reached or receives a termination message from the bi-directional charger based on the battery system, it starts sending the vehicle's ending message. After confirming that C1 and C2 are disconnected, it can perform C5 and C6 adhesion detection, then disconnect C5 and C6, and finally disconnect switch S2. When the electronic lock is unlocked, the vehicle coupler voltage drops below 60 V DC. For electric vehicles with switch S2', the vehicle controller can disconnect switch S2' before disconnecting vehicle coupler.

E.5.3.7 Termination under abnormal conditions

During the charging and discharging process, when the bi-directional charger or electric vehicle detects a fault, it triggers anerror shutdown or emergency shutdown within the specified time according to but not limited to the fault classification provided in C.7.13. The specific execution actions are shown in C.4.10 and C.4.11.

Internal use only, not for resale or public post.

Annex F
(normative)
DC charging technology with multiple vehicle couplers

F.1 Overview

This Annex provides the DC charging technology for electric vehicles with multiple vehicle couplers. A DC power supply device with multiple vehicle couplers refers to a DC power supply device with two or more vehicle couplerconnecting points. As an implementation method of DC power supply equipment, all requirements for DC power supply equipment in this document and related annexes also apply to DC power supply equipment with multiple vehicle couplers, unless otherwise specified in this Annex.

F.2 Classification and example of DC power supply equipment for electric vehicles with multiple vehicle couplers

F.2.1 System working mode

Classified according to the working mode of the system:

- Multiple vehicle couplers cannot be charged simultaneously;
- Multiple vehicle couplers can be charged simultaneously.

F.2.2 Output System

Classified according to the output system at electric vehicle side:

- Annex B DC charging system with multiple vehicle couplers;
- Annex C DC charging system with multiple vehicle couplers;
- Annex B and Annex C DC charging system with multiple vehicle couplers.

F.2.3 System example

Taking AC power supply as an example, the circuit schematic of DC power supply system of the electric vehicle with dual vehicle couplersis shown in Figure F.1. For DC power supply, except for the power supply side, the rest are similar. Two or more vehicle couplers shall comply with the design principles and safety requirements of dual couplers.

Internal use only, not for resale or public post.

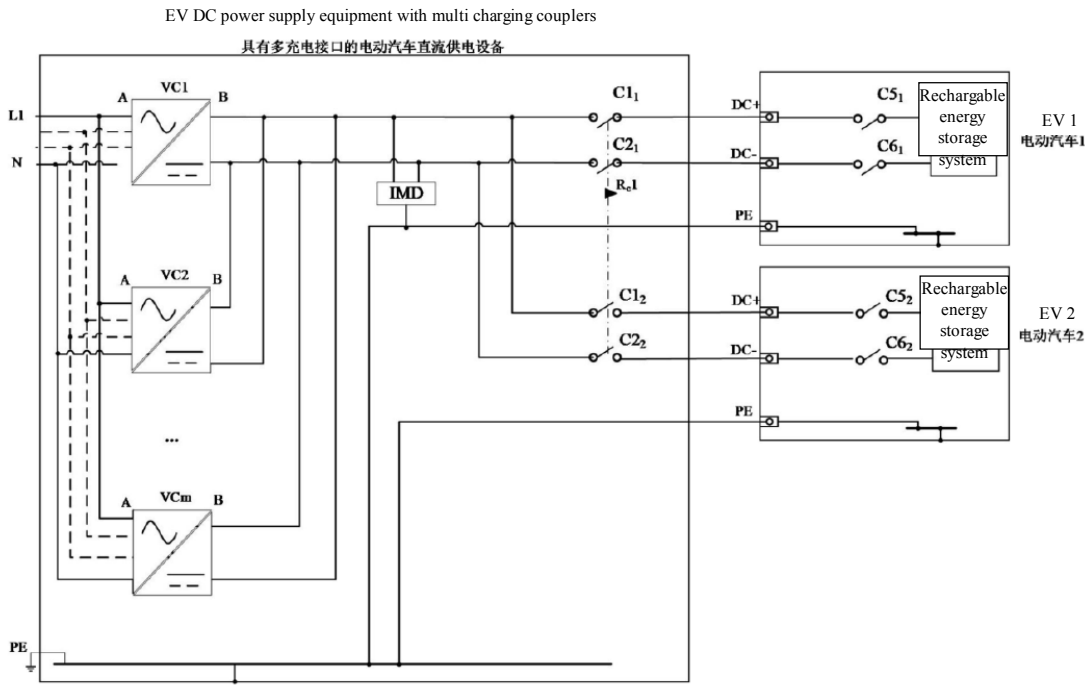

Key

Rc1, Rc2 - Safety Lock

a) Working mode of not charging simultaneously

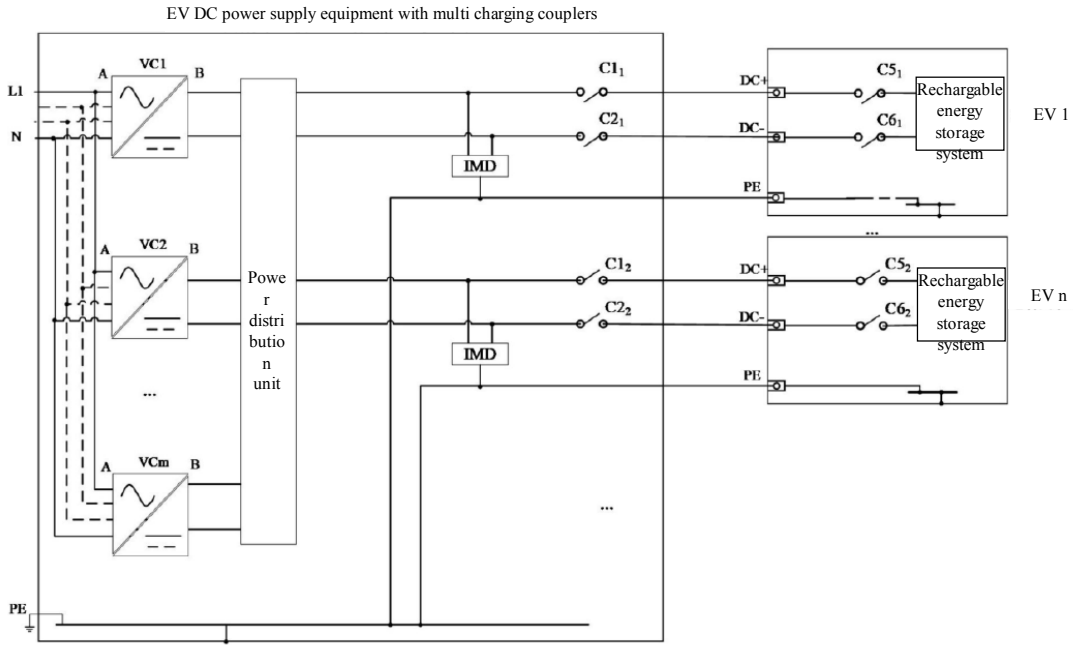

b) Working mode of charging simultaneously

Figure F.1 - Circuit schematic diagram of DC power supply system of electric vehicle with dual vehicle couplers

F.3 Structural requirements

F.3.1 System Configuration

F.3.1.1 Structural requirements for Annex B DC power supply equipment

DC power supply equipment with multiple vehicle couplers shall be equipped with vehicle connectors that comply with provisions of GB/T 20234.3-2023. To ensure normal charging function, necessary communication and power transmission hardware (such as CAN transceiver, control power supply, control pilot circuit, contactor, etc.) shall also be equipped, as shown in Figure B.1.

F.3.1.2 Structural requirements for Annex C DC power supply equipment

DC power supply equipment with multiple vehicle couplers shall be equipped with vehicle connectors that comply with provisions ofGB/T 20234.4-2023. To ensure normal charging function, necessary communication and power transmission hardware (such as CAN transceiver, control power supply, control pilot circuit, contactor, etc.) shall also be equipped, as shown in Figure C.1.

F.3.2 Vehicle connectors and cable assembly

All unused vehicle connectors and cables management and storage shall comply with the provisions of 11.6.

F.3.3 DC output disconnection device

The DC+ and DC- of each DC power supply circuit of the DC power supply equipment shall be equipped with contactors C1 and C2 or their equivalent devices, and shall be able to safely cut off the connection between the vehicle and the electric vehicle power supply equipment when charging at the rated continuous current. The electrical clearance and creepage distance of contactors C1 and C2 in the disconnected state shall comply with the provisions of 11.4, and at least meet the basic insulation requirements.

F.4 Performance of DC charging system

F.4.1 Basic performance requirements

The DC charging system with multiple vehicle couplers shall comply with the technical requirements of the main text and corresponding annexes of this document. The performance of DC power supply equipment shall comply with the requirements of the main text of this document and the corresponding Annexes. If two or more vehicle couplers are used for charging simultaneously, the output of any one or more vehicle couplers shall not cause interference with any other vehicle couplers.

F.4.2 Performance requirements of charging simultaneously

When multiple vehicle couplers of a DC charging system charge different electric vehicles simultaneously, it shall ensure galvanic seperation between each DC power supply circuit and have a certain strategy of automatic power distribution function.

F.5 Safety requirements for DC charging

F.5.1 Basic safety requirements

The protective conductor of each charging cable in the DC power supply equipment

Internal use only, not for resale or public post.

with multiple vehicle couplers shall be connected to a common protective earthing conductor. Each DC power supply circuit shall be separately equipped with an insulation monitoring device (IMD) between the DC power supply circuit and the charger casing that complies with Annex B or Annex C. The Y capacitor at the output end of each DC power supply circuit shall meet the corresponding system requirements.

The response time of IMD during simultaneous charging at multiple vehicle couplers shall not be affected by other insulation monitoring devices.

Select circuit components, including those used for isolation devices, whose rated voltage shall meet the maximum rated voltage requirements of the charging system, and consider all situations (including errors) of the DC power supply circuit output during normal charging and single faults.

The DC power supply equipment supporting (Annex B and Annex C) shall not cause the output voltage of one charging system applies the vehicle coupler of another system.

F.5.2 Short circuit protection

Each connecting point of the DC power supply equipment with multiple vehicle couplers shall have a separate short-circuit protection device and comply with the requirements of the corresponding charging system in 13.3 and C.7.10.

F.5.3 Overload protection

Each connecting point of the DC power supply equipment with multiple vehicle couplers shall have separate overload protection and comply with the requirements of the corresponding charging system in 13.2 and C.7.10.

F.5.4 Vehicle connector contacts that are not connected to charging being live

During the energy transfer process, the accessible conductors of other unconnected charging vehicle connectors shall be isolated from the live DC output through basic insulation or reinforced insulation.

If isolation is achieved through basic insulation, within 1 second after normal operation and the first fault, the energy or voltage between the contact of the unconnected charging vehicle connector and the protective conductor shall be less than or equal to 0.5 mJ or 60 V DC.

F.5.5 Additional safety requirements for multiple vehicle couplers charging simultaneously

The charging system is equipped with switch components, such as contactors, and measures shall be taken to prevent unexpected electrical connections of the vehicle caused by switch component failures. These measures shall prevent short circuits between batteries of different electric vehicles. This protection can be achieved through one or more of the following measures:

- Each DC power supply circuit shallbe equipped with anti backflow diodes. Diodes shall be installed between the switch components and the output

Internal use only, not for resale or public post.

terminals of each vehicle connector;

- The circuit with switch components shall be equipped with a fuse (or similar device with overcurrent and short circuit protection characteristics).
- The contactor with electrical or mechanical locking shall be used to prevent simultaneous closure.

F.5.6 Contactor adhesion detection

DC power supply equipment with multiple vehicle couplers shall have contactor contact adhesion detection to avoid accidental dangerous currents between one electric vehicle and the DC power supply equipment, or between two or more electric vehicles connected to the DC power supply equipment simultaneously, and to prevent dangerous voltages from appearing on unconnected vehicle connectors.

During the self check phase, if detecting the contactor adhesion in a certain DC power supply circuit, the DC power supply equipment shall not allow this DC power supply circuit to continue charging; After the energy transfer is completed, iif detecting the contactor adhesion in a certain DC power supply circuit, the DC power supply equipment shall stop this charging the DC power supply circuit again; Other vehicle couplers can continue to charge.

Internal use only, not for resale or public post.

Annex G
(normative)
DC charging compatibility technology solution for using vehicle adaptor specified in GB/T 20234.4

G.1 Overview

This Annex is applicable to the charging compatibility solution for connecting electric vehicles specified in Annex C to the DC power supply equipmentspecified in Annex B (i.e. conductive non on-board charger, hereinafter referred to as "charger") using the vehicle adaptor specified in GB/T 20234.4.

This Annex also provides an extended compatibility solution applicable to the charging system in Annex C.

G.2 Vehicle adaptor

G.2.1 Design of control pilot circuit

The control pilot circuit inside the vehicle adaptor is shown in Figure G.1. The combination of Rc'and Rc"is used as hardware encoding (equivalent to Rc in the vehicle connector in Annex C).

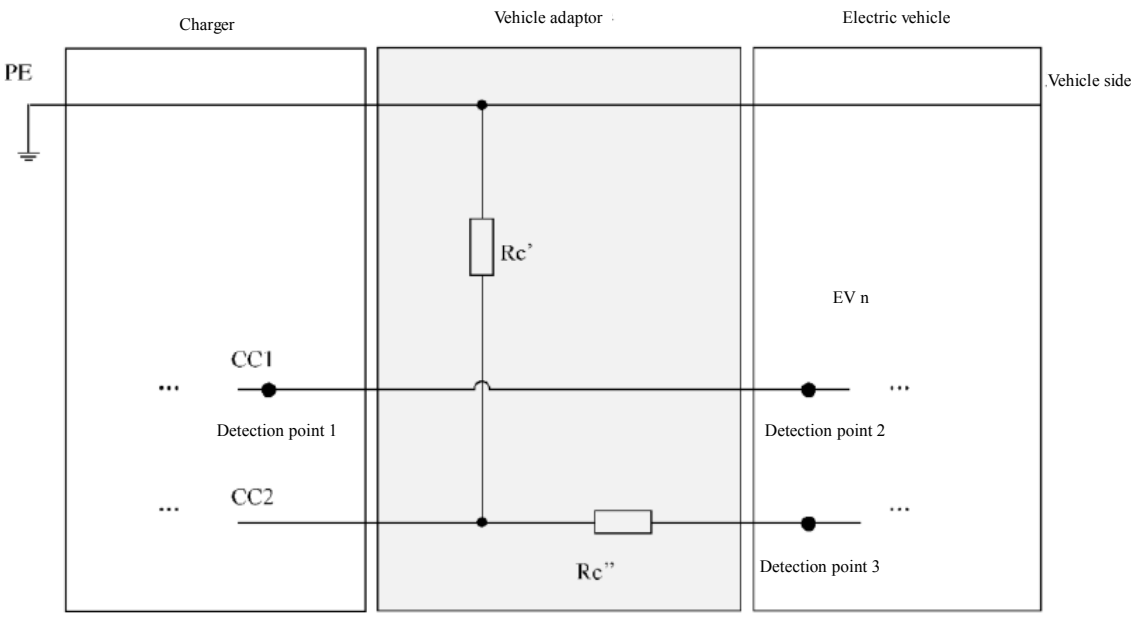

Key

CC1, CC2	- Control pilot circuit;
Rc'	- Resistance between CC2 and PE inside vehicle adaptor;
Rc''	- Resistance on the CC2 line inside vehicle adaptor;
Detection point 1	- Position to detect the voltage between CC1 and PE inside charger;
Detection point 2	- Position to detect the voltage between CC1 and PE inside vehicle;
Detection point 3	- Position to detect the voltage between CC2 and PEinside vehicle.

Figure G.1 - Circuit principle of vehicle adaptor

Internal use only, not for resale or public post.

G.2.2 Hardware coding combination design

Table G.1 shows the voltage classification and hardware coding combination of detection point 3 when connecting different types of chargers to Annex C electric vehicles.

Table G.1 - Hardware encoding combination

Type	Vehicle connector	Specialized vehicle adaptor		voltage value of detection point 3 [a] V					
	Rc resistance [b] Ω	Rc' resistance [b] Ω	Rc" resistance [b] Ω	adaptoronly connected to the vehicle			Fully connected		
				Min. Value	Nominal value	Max. Value	Min. Value	Nominal value	Max. Value
CHAdeMO vehicle adaptor [c]		200	100	2.59	2.77	2.95	1.85	2	2.15
CCS1 vehicle adaptor [c]	—	2100	360	8.06	8.53	9.01	3.54	4	•1.32
CCS2 vehicle adaptor [c]		300	250	3.99	4.26	4.53	3.75	4	4.26
Annex C [d]	1000	—	—	—	—	—	5.64	6	6.36
vehicle adaptor	—	1000	1500	8.10	8.57	9.05	7.54	8	8.46
Reserve [e]	5000	—	—	—	—	—	9.47	10	10.53

[a]All voltages are effective values measured after stabilization. Taking U2 as 12 V as an example, the pull-up voltage U2 at detection point 3 shall not exceed 28 V, which is customized by the car factory.

[b]Maintain accuracy range under operating environmental conditions and within the available lifespan. The resistance accuracy is not greater than ± 1%.

[c]The control pilot circuits for the CHAdeMO vehicle adaptor, CCS1 vehicle adaptor, and CCS2 vehicle adaptorare shown in Annex H.

[d]The charging system in Annex C does not require the use of a vehicle adaptor during the charging process, here is only used to provide voltage classification instructions for detection point 3.

[e]As Ethernet communication methodshown in G.4.1.

G.3 Charging compatible solution

G.3.1 Control pilot circuit solution

Figure G.2 shows a DC charging solution that supports Annex B charging compatibility, where the parameters of the charger and the control pilot circuit inside the electric vehicle should comply with the corresponding provisions in Tables B.1 and C-1. Based on Annex C, the vehicle side control pilot circuit should also include a resistor R4c 'to simulate the resistance inside the vehicle inlet in Annex B; Switch S2 is a selector switch, position 0 is not connected, position 1 is connected to resistor R4, and position 2 is connected to resistor R4c '.

For electric vehicles equipped with switch S2 'as shown in Figure G.2a), the

initialization state of switch S2 is set to position 0 when not connected; For electric vehicles equipped with switch S2 'as shown in Figure G.2b), when not connected, the initialization state of switch S2 is position 2.

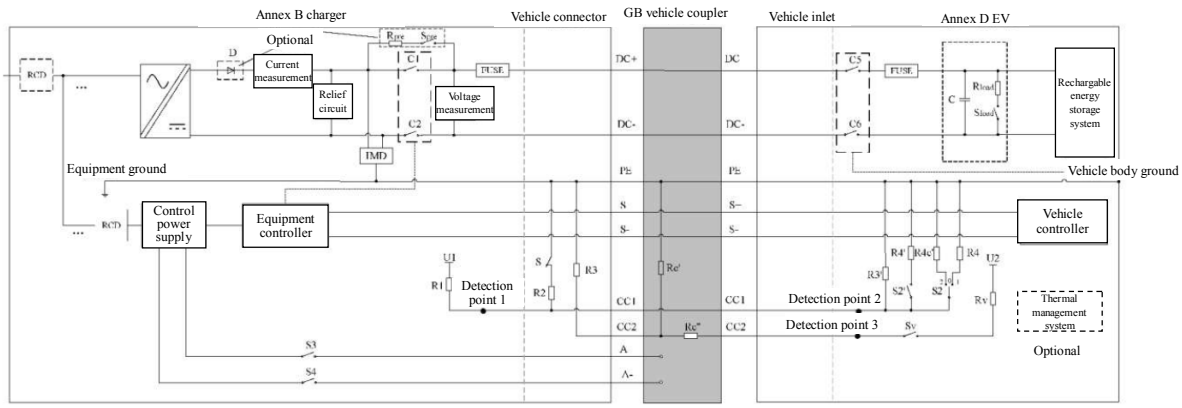

a) Equipped with switch S2'

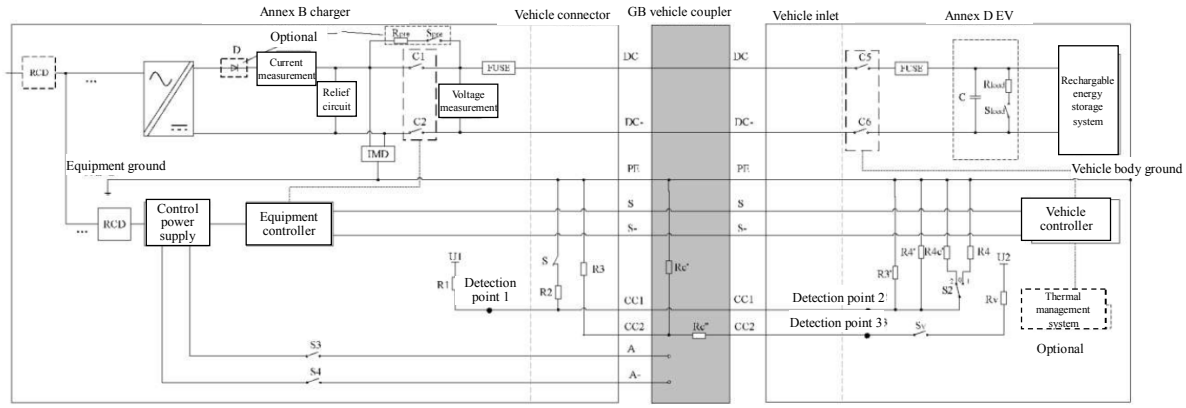

b) Not equipped with switch S2'

Figure G.2 Support Annex B Compatible DC Charging Solution

Table G.2 specifies the parameters of the charging compatible electric vehicle control pilot circuit corresponding to Figure G.2.

Table G.2 Control pilot circuit parameters for electric vehicles with charging compatibility

Parameter [a]	Symbol	Unit	Nominal value	Max. value	Min. value	Remarks
R3' equivalent resistance	R3'	Ω	100 000	101 000	99 000	
R4 equivalent resistance	R4	Ω	1 300	1 313	1 287	
R4' equivalent resistance	R4'	Ω	2 740	2 767	2 713	

R4c' equivalent resistance	R4c'	Ω	1 000	1 010	990	See Figure G.2a)
			1 600	1 616	1 584	See FigureG.2b)
Rv equivalent resistance	Rv	Ω	1 000	1 010	990	
Pull-up voltage [b]	U2	V	12	12.6	11.4	
S2 switch	S2	—	Position 0	—		Position 0: Initial position, suspended; Position 1: Connect resistor R4; Position 2: Connect resistor R4c '

Table G.2 - Control pilot circuit parameters for electric vehicles with charging compatibility (continued)

Parameter [a]	Symbol	Unit	Nominal value	Max. value	Min. value	Remarks
S2' switch [c]	S2'	—	Normally open	—	—	Optional
Sv switch	Sv	—	Normally open / Normally close	—	—	

[a]Maintain accuracy range under operating environmental conditions and within the available lifespan. The resistance accuracy should not exceed ± 1%.

[b]The vehicle manufacturer can customize that the pull-up voltage U2 should not exceed 28 V.

[c] Vehicle manufacturers can choose to equip it. As configured, the initialization status is disconnected.

G.3.2 Version judgment process

Electric vehicles can be connected to chargers using corresponding vehicle adaptors. When the voltage value at detection point 2 determines that the electric vehicle is connected to the charger through the vehicle adaptor, the electric vehicle should be in a non drivable state. After complete connection, the electric vehicle should be able to confirm the type of charger connected by detecting the voltage value at point 3 and enter the corresponding charging process. Taking the charging of an electric vehicle (with a pull-up voltage U2 of 12 V) in Figure G.2a) as an example, the version judgment process is as follows [Figure G.3a)].

When the voltage value of detection point 3 is within the range of 6 V, the electric vehicle confirms that the vehicle coupler is fully connected and connected to the charger using the charging connection device in GB/T 20234.4. The vehicle controller closes the switch S2 ', and the voltage at detection point 2 is 2.34 V. The charger and vehicle should enter C.4.3 to prepare for charging.

-When the voltage value of detection point 3 is within the range of 8 V, the electric vehicle confirms that the vehicle coupler is fully connected and connected to the charger using the charging connection device of GB/T 20234.3-2023. The vehicle controller places switch S2 on R4c ', and at this time, the voltage at detection point 2 is 4 V and waits for the communication handshake message from the charger. Chargers and electric vehicles should enter the self check stage starting from B.4.3.

Internal use only, not for resale or public post. www.gbstandards.org

-When the voltage value of detection point 3 is not within the range of 6 V and 8 V, the electric vehicle is judged as connected abnormally and charging is not allowed.

Taking the charging of the electric vehicle (pull-up voltage U2 is 12 V) in Figure G.2b of this Annex as an example, the initialization status of the switch S2 in the vehicle is position 2 (connected to R4c '), and the version judgment process is as follows [Figure G.3b)].

When the voltage value of detection point 3 is within the range of 6 V, the electric vehicle confirms that the vehicle coupler is fully connected and connected to the charger using the charging connection device in GB/T 20234.4. The vehicle controller switches the S2 state to suspended position 0, and the charger and electric vehicle should enter the charging process in C.4.2. After the electric vehicle is ready for charging, S2 should be switched to position 1.

When the voltage value of detection point 3 is within the range of 8 V, the electric vehicle confirms that the vehicle coupler is fully connected and connected to the charger using the charging connection device specified in GB/T 20234.4; After the vehicle controller confirms that the detection point 2 is 4 V (within the Ulc voltage range in Table B.1), it waits for the communication handshake message from the charger. The charger and electric vehicle should enter B.4.3 to start the self check phase.

When the voltage value of detection point 3 is not within the range of 6 V and 8 V, the electric vehicle is judged as connected abnormally and charging is not allowed.

Internal use only, not for resale or public post.

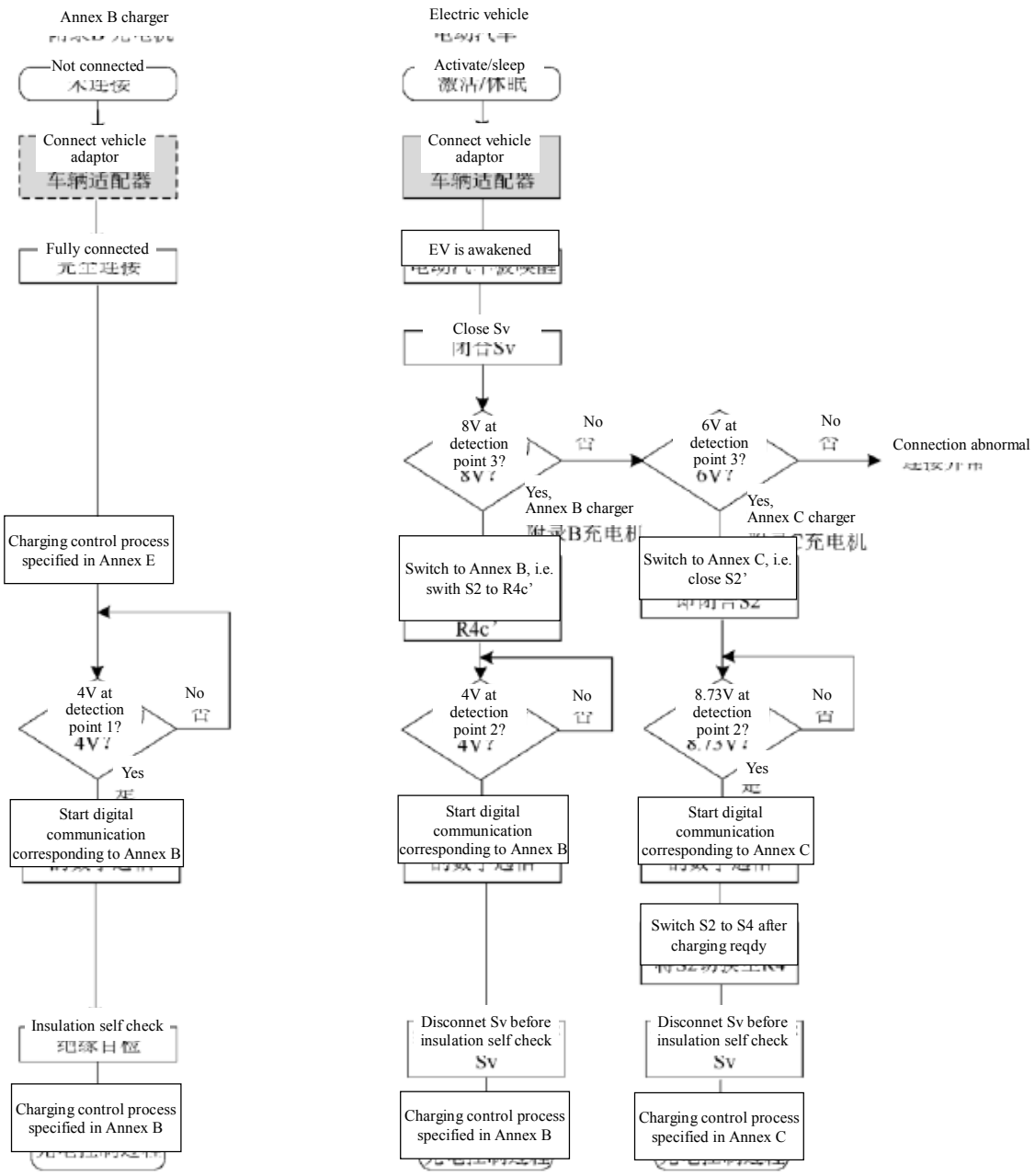

a) Electric vehicle equipped with switch S2'

Figure G.3 - Version judgment process

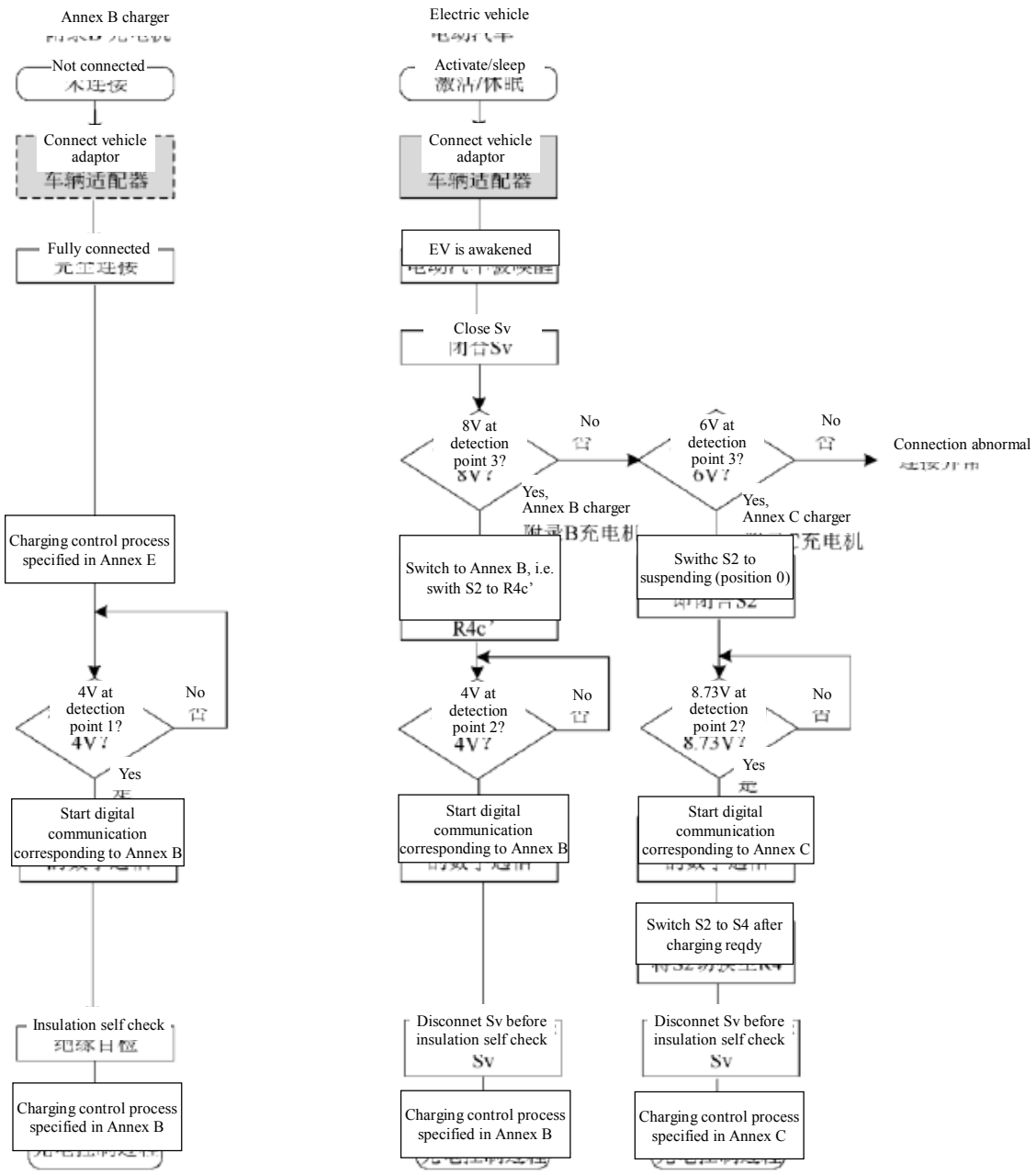

b) Electric vehicles not equipped with switch S2'

NOTE 1: The vehicle adaptor (Class A and Class B) can be connected to the charger first, or to the electric vehicle first, and the user can decide the operation sequence at their own discretion. The vehicle adaptor (Class C) only needs to be connected to the electric vehicle.

NOTE 2: The definitions of Class A, B, and C adaptors can be found in GB/T 20234.4.

Figure G.3 Version Determination Process (Continued)

G.3.3 Charging control process

G.3.3.1 Vehicle inlet and vehicle adaptor and/or vehicle connector connection: put the vehicle in a non drivable state

When an electric vehicle enters the drivable state, the switch Sv should be closed first. The vehicle controller confirms whether the CC2 circuit in the vehicle coupler is

connected normally by measuring the voltage value at detection point 3. When the voltage value at detection point 3 is the pull-up voltage U2, it is confirmed that the vehicle inlet is not connected to the vehicle connector and/or adaptor, and the electric vehicle is in the drivable state.

After the vehicle connector is connected to the vehicle inlet, the electric vehicle can automatically start a certain triggering condition (such as opening the charging port cover, connecting the vehicle inlet to the vehicle adaptor and/or the vehicle connector, or setting the function of the vehicle's charging button, switch, etc.), and put the electric vehicle in a non driving state through locking devices or other control measures.

G.3.3.2 Vehicle wake-up

When the vehicle inlet is connected to the vehicle adaptor and vehicle connector, the vehicle controller should be able to be awakened through detection point 2 or detection point 3 (for vehicles with switch Sv status closed before connection).

When the vehicle inlet is only connected to the vehicle adaptor, the vehicle controller should be able to be awakened through detection point 3 for vehicles with switch Sv initialization status closed.

G.3.3.3 Confirmation of charging version and vehicle coupler connection

After awakening, the vehicle controller should confirm whether the CC2 circuit in the vehicle coupler is connected properly and the type of charger it is connected to by checking the voltage value of detection point 3. When the voltage value of detection point 3 is the corresponding voltage of the vehicle adaptor when fully connected in Table G.1, confirm that it is connected to the charger using the charging connection device using GB/T 20234.3-2023; When the voltage value at detection point 3 is other voltage values, please refer to the attachment

Record H.

The vehicle controller should switch switch S2 to position 2 (for vehicles equipped with switch S2 '). The vehicle controller should determine whether the CC1 circuit in the vehicle coupler is connected properly by measuring the voltage value of detection point 2. When the voltage value of detection point 2 is 4 V (Ulc voltage range in Table B.1), it is confirmed that the CC1 circuit in the vehicle coupler is connected.

The vehicle controller should switch the communication protocol version to the corresponding communication protocol in Annex B. After receiving the communication handshake message sent by the device controller, the vehicle controller begins to send the communication handshake message.

G.3.3.4 Other stages of charging control process

In other stages of the charging control process, including self check of the charger, preparation for charging, energy transfer, and completion of charging under normal conditions, the provisions of B.4.3 to B.4.6, B.5, and B.6 should be met. When the vehicle meets the minimum cross-sectional area requirements for protective conductors applicable

Internal use only, not for resale or public post.

to Annex B as specified in 7.4, its insulation monitoring cycle should not exceed 100 seconds; When the vehicle meets the minimum cross-sectional area requirements for protective conductors applicable to Annex C specified in 7.4, its insulation monitoring cycle should not exceed 10 seconds.

G.3.3.5 Locking function

When the vehicle controller determines complete connection, the electronic lock should be kept reliably locked; After the energy transfer is completed and the vehicle coupler voltage drops below 60 V DC, the electronic lock can be unlocked.

G.3.4 Charging termination under abnormal conditions

G.3.4.1 Loss of protective earthing continuity

In the energy transfer stage, when there is a PE disconnection on the charger side, between the adaptor and the vehicle inlet, or on the vehicle side, the equipment controller should trigger an emergency shutdown and comply with the provisions of B.4.7.5.

In the energy transfer stage, when there is a PE wire breakage on the charger side, between the adaptor and the vehicle connector, between the adaptor and the vehicle inlet, or when there is a PE wire breakage on the vehicle side, the vehicle controller should trigger an emergency shutdown and comply with the provisions of C.4.11.

G.3.4.2 Abnormal disconnection of connection signal

In the energy transfer stage, the device controller detects the voltage at detection point 1. If the vehicle coupler changes from fully connected to unreliable connection (not within the Ulc voltage range), including abnormal disconnection between the vehicle connector and adaptor, adaptor and vehicle inlet, the device controller should trigger an emergency shutdown and comply with the provisions of B.4.7.5; The vehicle controller should detect the voltage at detection point 2. If it is determined that the vehicle coupler has changed from fully connected to unreliable (not within the Ulc voltage range in Table B.1), the vehicle controller should trigger an emergency shutdown and comply with the provisions of C.4.11.

During the charging process, if an electric vehicle experiences a fault that prevents it from continuing to charge (determined by the severity of the fault), the vehicle controller should trigger a fault shutdown or emergency shutdown, and comply with the provisions of C.4.10.2 or C.4.11.2.

Note: Faults that cannot continue charging include but are not limited to abnormal electronic lock status, insulation faults, etc.

G.4 Expansion Compatibility Solutions

G.4.1 Communication expansion circuit

The Chaoji system should have expansion capabilities, supporting future communication expansion through Re/Rc/Sc resistors, such as Ethernet, as shown in the figure

Internal use only, not for resale or public post. www.gbstandards.org

G. As shown in Figure 4, the recommended parameters for the corresponding guidance circuit are shown in Table G 3. The charger that supports communication extension function will switch between Ethernet and CAN communication methods through the Sc switch. When not connected, the default switch Sc of the charger with Ethernet communication mode is set to position 1; After complete connection, when the electric vehicle detects the voltage at point 3 to determine the type of charger and switches states, if the electric vehicle does not support Ethernet communication, the charger will set the switch Sc to position 2, and both parties will enter the charging control process according to Annex C and use CAN

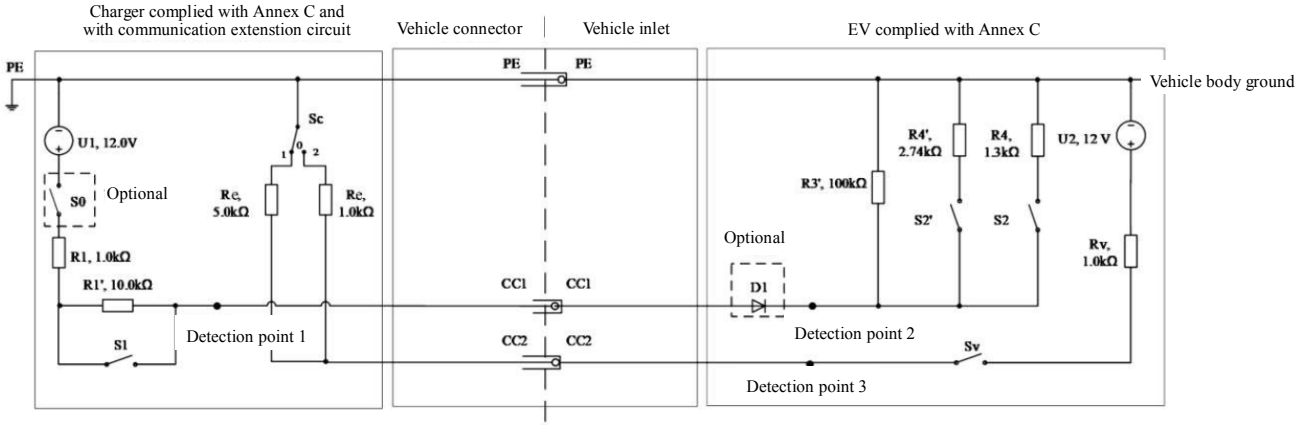

Figure G.4 - Principle of communication expansion circuit

Table G.3 - Communication Expansion Circuit Design Parameters

Parameter [a]	Symbol	Unit	Nominal value	Max. value	Min. value	Remarks
Re equivalent resistance	Re	Ω	5000	5050	4950	Sc locates in position 1，support Ethernet
Rc equivalent resistance	Rc	Ω	1000	1010	990	Sc locates in position 2，support CAN
[a]Other resistance and switch requirements in Figure G.4 are shown in Table C.1.						

G.4.2 V2X expansion circuit

This circuit is mainly used for electric vehicles to provide temporary starting power to devices without additional power supply through CC2, such as portable V2X devices. The control pilot circuit design is shown in Figure G.5, and the corresponding guidance circuit parameters are recommended in Table G.4.

Table G.4 - Recommended design parameters for v2x guidance circuit

Parameter [a]	Symbol	Unit	Nominal value	Max. value	Min. value	Remarks
Equivalent power supply	U2	V	12	12.6	11.4	Rated current not less than 1.5 A
Rx equivalent resistance	Rx	Ω	—	—	—	V2X device internal load

Internal use only, not for resale or public post.

S1 switch	S1	—	Normally close	—	—	
Sx’ switch	Sx’	—	Normally open	—	—	The coil needs to be activated with a voltage of 5 V before closing
Sx switch	Sx	—	Normally open	—	—	
Equivalent diode D2 voltage drop	D2	V	7	—	—	
[a]Other resistance and switch requirements in Figure G.8 are shown in Table G.1.						

Taking electric vehicle reservation as an example, the charging and discharging process is shown in Figure G.6. The initialization status of the V2X device side switch Sx 'is normally open and can be controlled through an external button or by adding a detection voltage circuit (such as the equivalent diode D2 and coil combination in Figure G.5). Schedule charging can also be initiated by the V2X device, which informs the electric vehicle of relevant schedule information through digital communication. The electric vehicle then turns off the switch Sx and starts the schedule timer. When the time is up, the V2X device is awakened by closing the switch Sx. During pre charging, the V2X device should control the peak impulse current to be less than 20 A.

Internal use only, not for resale or public post.

Annex H
(informative)
DC charging compatibility technology solutionapplicable for CHAdeMO 2.x and blow charing system and CCS charging system

H.1 Overview

This Annex provides a charging compatibility solution for connecting electric vehicles specified in Annex C with DC power supply equipment of Japanese CHAdeMO 2.x and below (i.e. conductive non on-board chargers, hereinafter referred to as "chargers") and European/American CCS1/CCS2 chargers by using other specialized vehicle adaptors.

H.2 Other specialized vehicle adaptor

H.2.1 Types

The types of specialized vehicle adaptors involved in this Annex include:

- CHAdeMO vehicle adaptor: The adaptor socket adopts the AA type vehicle inlet specified in IEC 62196-3, and the adaptor plug adopts the vehicle connector specified in GB/T 20234.4;
- CCS1 vehicle adaptor: The adaptor socket adopts the EE type vehicle inlet specified in IEC 62196-3, and the adaptor plug adopts the vehicle connector specified in GB/T 20234.4;
- CCS2 vehicle adaptor: The adaptor socket adopts the FF type vehicle inlet specified in IEC 62196-3, and the adaptor plug adopts the vehicle connector specified in GB/T 20234.4.

H.2.2 Control pilot circuit

The coding resistance inside CHAdeMO vehicle adaptor, CCS1 vehicle adaptor, and CCS2 vehicle adaptor is shown in Table G.1.

H.3 Charging compatibility solution

H.3.1 Control pilot circuit solution

Figure H.1 shows the control pilot circuit of electric vehicle with vehicle adaptor that is compatible with chargers of Japan CHAdeMO 2.x and below, as well as Annex B chargers.

Internal use only, not for resale or public post.

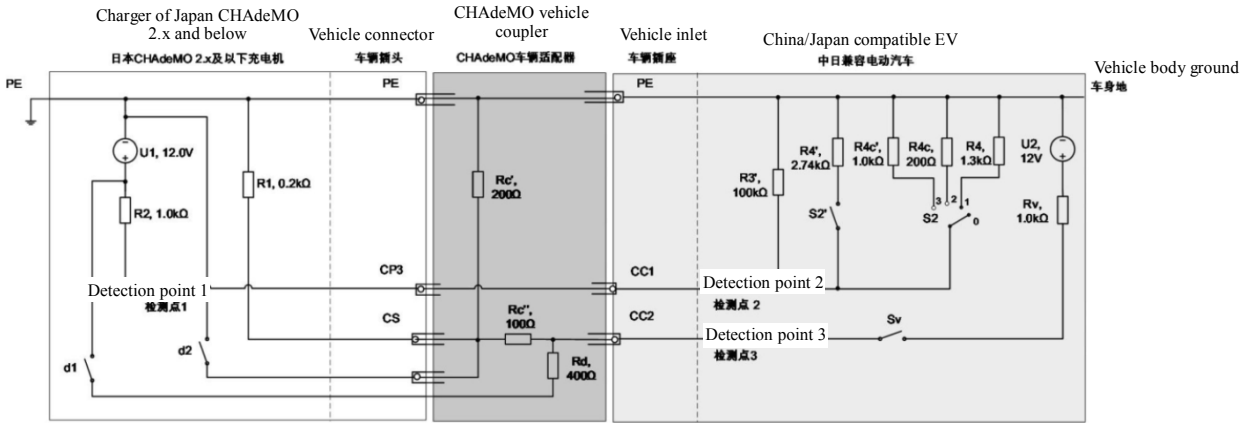

a) Connected to charger of CHAdeMO 2.x and below

Figure H.1 - Compatibility solution for control pilot chargingof China/Japan DC charging

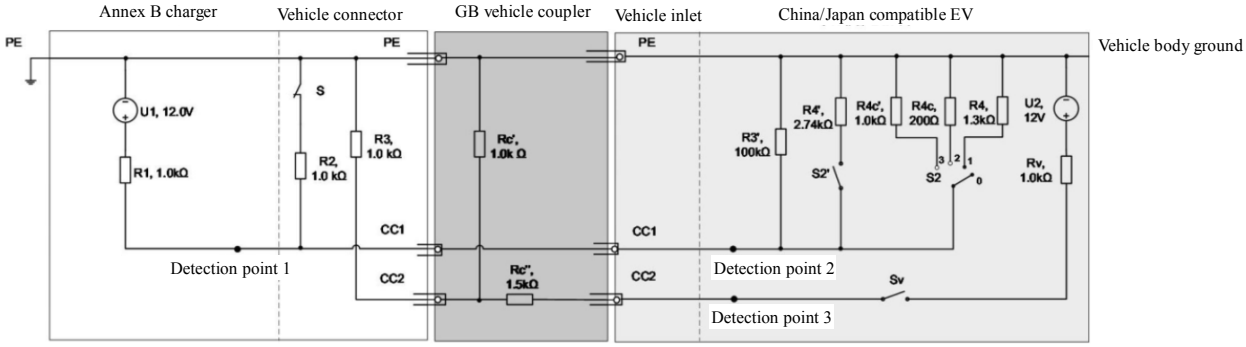

b) Connected to Annex B charger

Figure H.1 - Compatibility solution for control pilot chargingof China/Japan DC charging(Continued)

Figure H.2 shows the control pilot circuit for electric vehicles with vehicle adaptorthat is compatible with European/American CCS1 chargers, European and American CCS2 chargers, and Annex B chargerby using a.

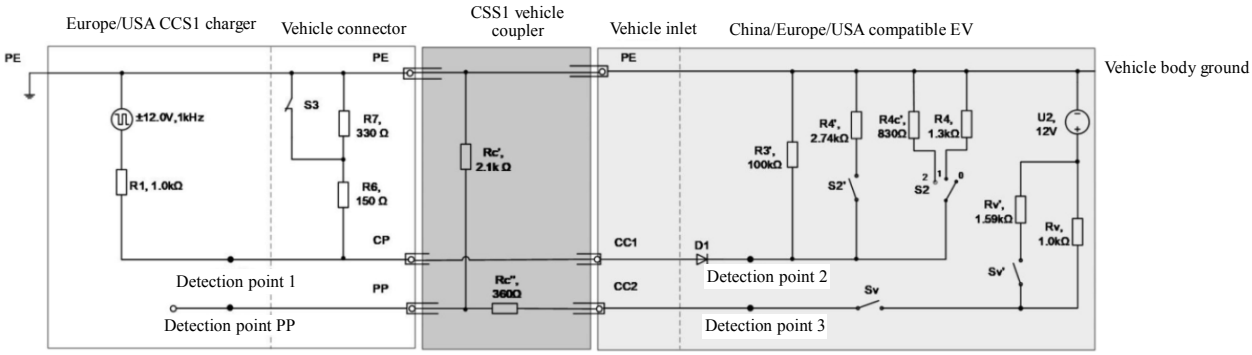

a) Connected to CCS1 charger

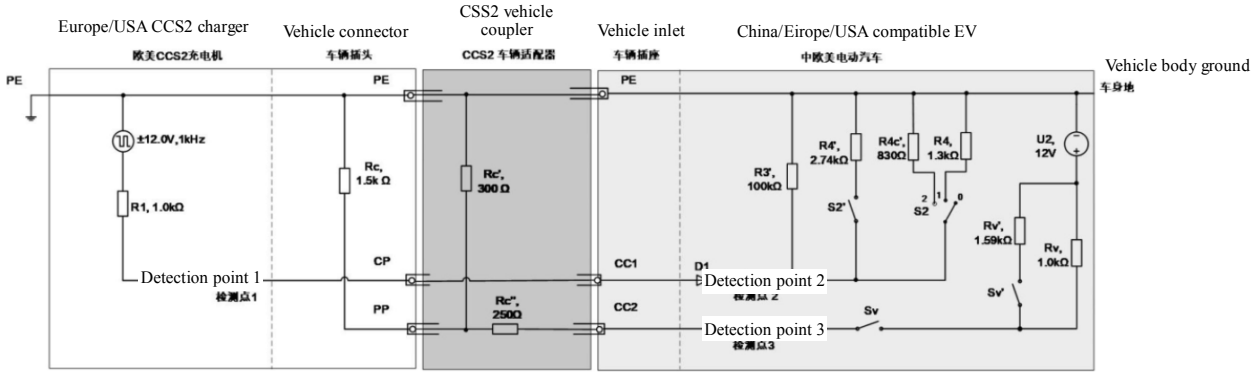

b) Connected to CCS2 charger

Figure H.2 - Compatibility solution for control pilot charging of China/Europe/USA DC charging

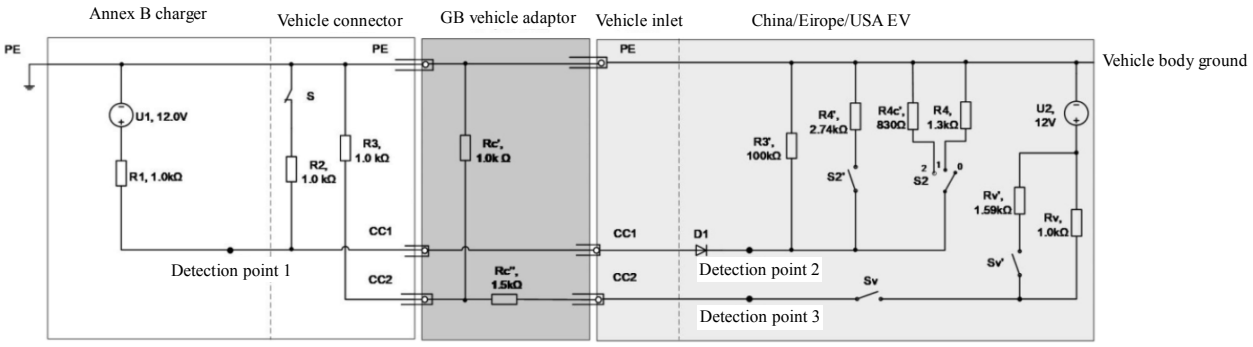

c) Connect to Annex B charger

Figure H.2 - Compatibility solution for control pilot charging of China/Europe/USA DC charging(continued)

Figure H.3 shows the control pilot circuit of electric vehicle with vehicle adaptor that is compatible with the charger of Japan CHAdeMO 2.x and below, Europe/USA CCS1 charger, Europe/USA CCS2 charger, and Annex B charger, i.e., global version.

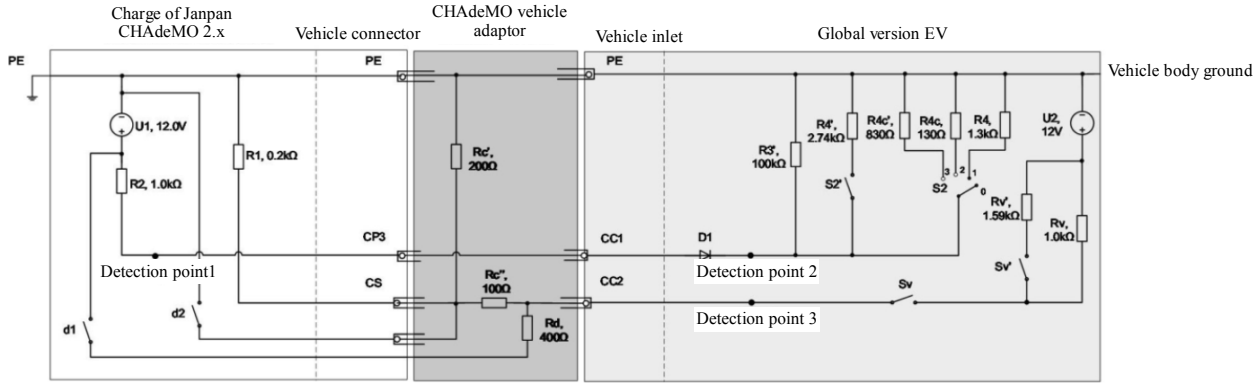

a) Connect to the charger below CHAdeM02. X

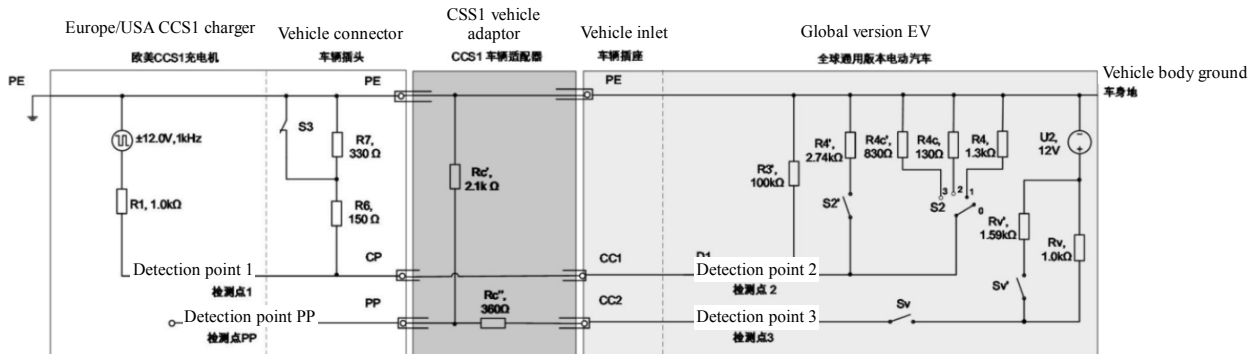

b) Connected to CCS1 charger

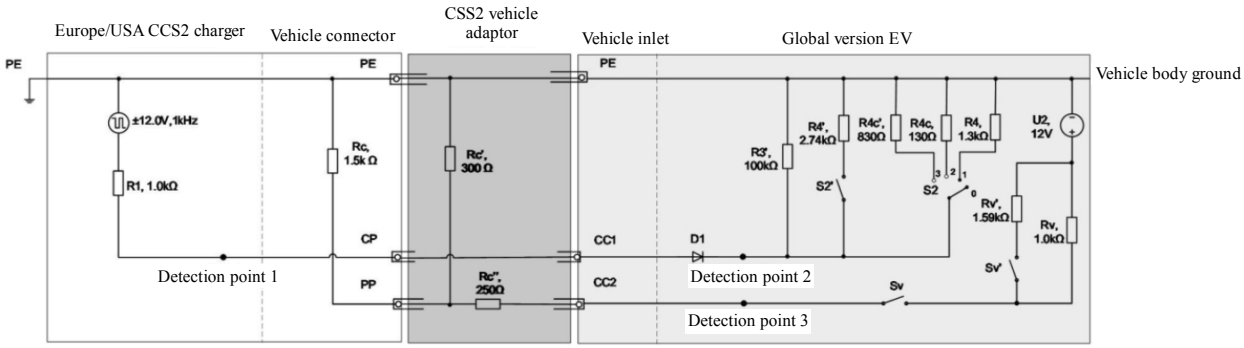

c) Connected to CCS2 charger

Figure H.3 - Compatibility solution for control pilotd charging of global DC charging

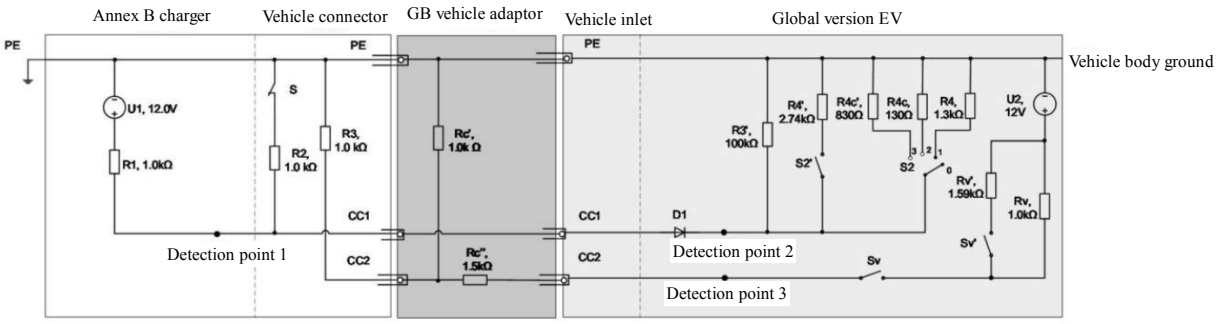

d) Connect to Annex B charger

Figure H.3 - Compatibility solution for control pilotd charging of global DC charging (Continued)

Table H.1 provides the control pilot circuit parameters for electric vehicles with charging compatibility corresponding to Figures H.1 to H.3.

Table H.1 - Control pilot circuit parameters for electric vehicles with charging compatibility

Parameter[a]	Symbol	Unit	Nominal value	Max. value	Min. value	Circuit version
R3’ equivalent resistance	R3’	Ω	100000	101000	99000	General

R4 equivalent resistance	R4	Ω	1300	1313	1287	General
R4’ equivalent resistance	R4’	Ω	2740	2767	2713	General
R4c equivalent resistance	R4c	Ω	130	131.3	128.7	See Figure H.3
			200	202	198	See Figure H.1
R4c’ equivalent resistance	R4C’	Ω	830	838.3	821.7	See Figure H.2 and H.3
			1000	1010	990	See Figure H.1
Rv’equivalent resistance	Rv’	Ω	1590	1605.9	1574.1	See Figure H.2 and H.3
Pull-up voltage [b]	U2	V	12	12.6	11.4	General
S2 switch	S2	—	Position 0			Position 0: Initial position, suspended; Position 1: Connecting resistor R4; Position 2: Connecting resistor R4c (see Figure H.1 and Figure H.3) or connecting resistor R4c'(see Figure H.2) Position 3: Connecting resistor R4c'(see Figure H.3)
S2’ switch	S2’	—	Normally open			General
Sv switch	Sv	—	Normally open / Normally close			General
Sv’ switch	Sv’	—	Normally open	—	—	See Figure H.2 and H.3
Equivalent diode voltage drop (2.75 mA~10 mA, -40℃~+85℃)	Vd1	V	0.70	0.85	0.55	See Figure H.2 and H.3

[a]Maintain accuracy range under operating environmental conditions and within the available lifespan. The resistance accuracy is not greater than ±1%.

[b]The vehicle manufacturer can customize. The pull-up voltage U2 is not greater than 28 V.

H.3.2 Version judgment process

Electric vehicles can be connected to the corresponding charger using a specialized vehicle adaptor. When the electric vehicle determines that it is connected to the charger through the vehicle adaptor based on the voltage value at detection point 2, the electric vehicle is in a non drivable state. After complete connection, the electric vehicle can confirm the type of connected charger by detecting the voltage value at point 3 and enter the corresponding charging process. Taking the charging of the electric vehicle in Figure H.3 (with a pull-up voltage of U2 of 12 V) as an example, the version judgment process is as follows:

- When the voltage value of detection point 3 is within the range of 2 V, and the electric vehicle confirms that the vehicle coupler is fully connected and connected to the charger of CHAdeMO 2.x and below, the vehicle controller will set switch S2 to R4c, and the charger and electric vehicle will enter the corresponding

charging control process of CHAdeMO 2.x and below;

- When the voltage value of detection point 3 is within the range of 4 V, the electric vehicle confirms that the vehicle coupler is fully connected and connected to the CCS charger. The vehicle controller places switch S2 on R4 and closes switch Sv', and the charger and electric vehicle enter the CCS charging control process;
- When the voltage value of detection point 3 is within the range of 6 V, the electric vehicle confirms that the vehicle coupler is fully connected and connected to the charger using the charging connection device in GB/T 20234.4. The vehicle controller closes the switch S2', and the voltage at detection point 2 is 2.34 V. The charger and vehicle enter C.4.3 and begin charging preparation;
- When the voltage value of detection point 3 is within the range of 8 V, the electric vehicle confirms that the vehicle coupler is fully connected and connected to the charger using the charging connection device of GB/T 20234.3-2023, and the vehicle controller places switch S2 on R4c'. At this time, the voltage at detection point 2 is 4 V and waits for the communication handshake message from the charger. Chargers and electric vehicles enter B.4.3 and begin the self check phase;
- When the voltage value of detection point 3 is not within the range of 2V, 4V, 6V, or 8V, the electric vehicle judges connection abnormally and charging is not allowed.

Internal use only, not for resale or public post.

Annex I
(normative)
Locking device for charging connection device

I.1 Locking device for AC charging coupler

When the maximum charging current of the AC power supply equipment and on-board charger is greater than 16 A, the EV plug and socket-outlet and vehicle coupler shall have locking devices. The locking device of the communication charging coupler is shown in Figures U and 1.2.

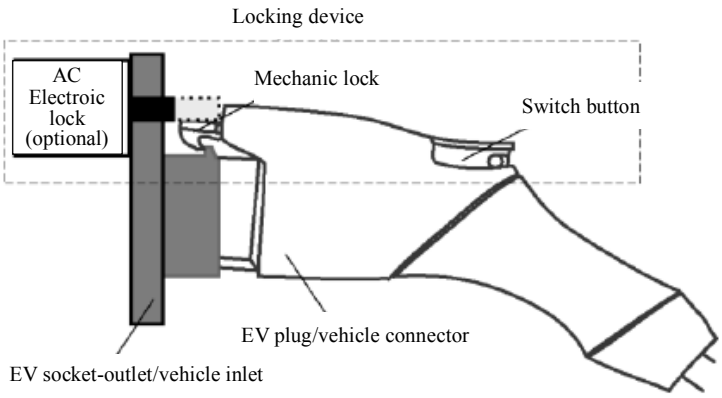

Figure I.1 - Schematic diagram of the locking device for AC charging coupler (current less than 16 A)

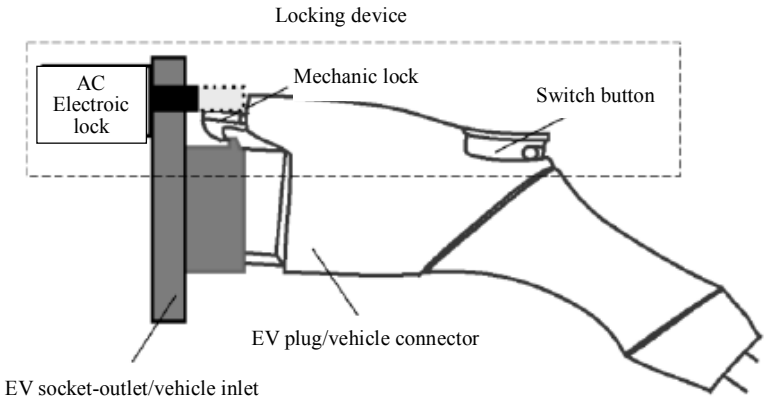

Figure I.2 - Schematic diagram of the locking device for AC charging coupler (current greater than 16 A)

I.2 Locking device for DC vehicle coupler

I.2.1 Structure

During DC charging, the vehicle coupler shall have a locking device.

The locking device for the DC vehicle coupler that complies with GB/T 20234.3-2023 is shown in Figure I.3.

Internal use only, not for resale or public post.

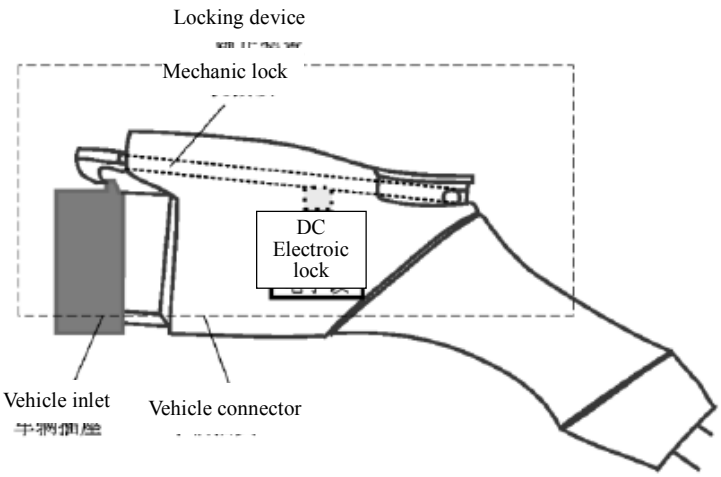

Figure I.3 - Schematic diagram of locking device for DC vehicle coupler (GB/T 20234.3-2023)

The locking device for the DC vehicle coupler that complies with GB/T 20234.4 is shown in Figure I.4.

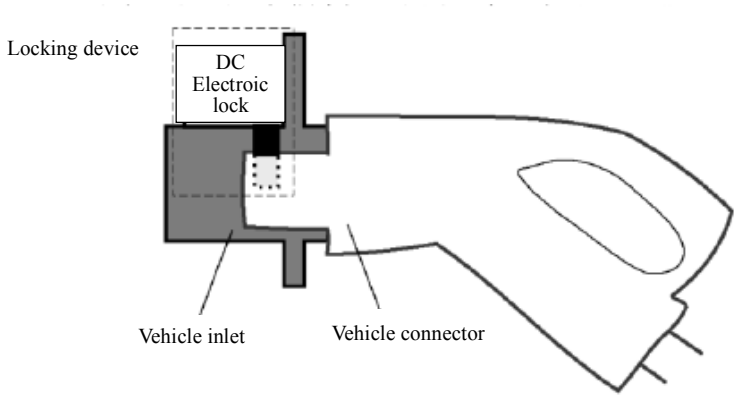

Figure I.4 - Schematic diagram of locking device for DC charging coupler (GB/T 20234.4)

I.2.2 Example of electronic lock function

The electronic lock power supply for the DC vehicle coupler that complies with GB/T 20234.3-2023 is provided and controlled by the DC power supply equipment, and should have a locking status feedback signal function, so that the DC equipment can correctly recognize that the electronic lock has correctly locked or is in the unlocked state of the mechanical lock. The functional example is shown in Figure I.5. When the electronic lock is not locked as expected or is not reliably locked, a fault signal can be sent to make the DC power supply equipment stop charging or can not starting charging.

Internal use only, not for resale or public post.

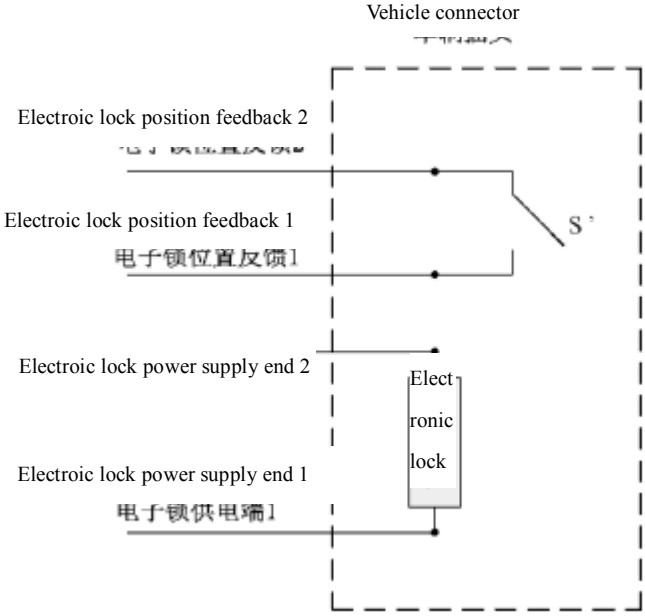

NOTE S' is a type of switch signal or other type of signal, confirmed through negotiation between the DC power supply equipment manufacturer and the connector manufacturer.

Figure I.5 - Example diagram of electronic lock function

The electronic lock power supply for DC vehicle couplers that comply with GB/T 20234.4 regulations is provided and controlled by electric vehicles, and should have a locking position feedback signal function, so that electric vehicles can correctly recognize whether the electronic lock is correctly locked or in an unlocked state. When the electronic lock is not locked as expected or not reliably locked, a fault signal can be sent to make the electric vehicle stop charign or can not startcharging.

Internal use only, not for resale or public post.

Annex J
(informative)
Pulse heating control principle for using the charging connection device specified in GB/T 20234.4

J.1 Overview

This Annex provides a method for implementing a power supply mode for heating power batteries, which is applicable to the specific DC power supply equipment (i.e. specific conductive non on-board chargers, hereinafter referred to as "chargers") using the charging connection device of GB/T 20234.4 and the coordination use between specific electric vehicles. This method is for reference only.

This Annex is applicable to pulse heating functions with frequencies ranging from 0.1 Hz to 1 Hz, and there is no mandatory regulation beyond this frequency range.

J.2 Pulse heating control process

J.2.1 Pulse heating parameter configuration

During the pulse heating parameter configuration stage, the charger sends the maximum discharging pulse current, maximum charging pulse current, minimum discharging pulse voltage, maximum charging pulse voltage, maximum discharging pulse time, shortest discharging pulse time, longest charging pulse time, and shortest charging pulse time during the pulse heating process to the electric vehicle; The vehicle sends the maximum discharging pulse current, maximum charging pulse current, minimum discharging pulse voltage, maximum charging pulse voltage, longest discharging pulse time, shortest discharging pulse time, longest charging pulse time, shortest charging pulse time, and longest heating time during the pulse heating process to the charger; Both parties confirm the parameters of the pulse heating process before proceeding to the next process.

J.2.2 Pulse heating curve configuration

After mutual confirmation of pulse heating parameter configuration, enter the pulse heating curve configuration stage.

The charger sends a waiting pulse heating curve configuration message. If it receives the pulse heating curve configuration message, the charger determines whether the pulse heating curve configuration parameters are greater than or equal to the minimum output capacity range of the charger. If they are greater than or equal to the minimum output capacity of the charger, the curve configuration is successfully restored and the next process is initiated; If it is less than the minimum output capacity, the recovery curve configuration fails and enters the end stage of pulse heating.

The vehicle sends pulse heating curve configuration parameters, which include but are not limited to discharging pulse limiting voltage, charging pulse limiting voltage, discharging pulse current amplitude, charging pulse current amplitude, discharging pulse time, and charging pulse time. After the charger returns to the curve configuration result, if the configuration is successful, proceed to the next process; If the configuration fails,

Internal use only, not for resale or public post.

enter the pulse heating end stage.

J.2.3 Pulse heating pre charge

The vehicle controller first closes C5 and C6, and the device controller detects that the voltage of the vehicle power supply circuit is normal (confirming that the voltage at the outer terminals of contactors C1 and C2 is within the communication message battery voltage error range of ≤ ± 5% and within the output voltage range of the charger). Then, according to its configuration circuit, conduct pre charge according to C.7.5 and then conduct the DC power supply circuit.

J.2.4 Pulse heating implementation

According to the pulse heating curve configuration, if in the charging pulse stage: when the device controller adjusts the charging current to reach the set value: when ΔI/dlmin ≤50 ms, adjust the charging current to be consistent with the command value within a maximum of 50 ms; When ΔI/dlmin>50 ms, adjust the charging current to match the command value within the longest ΔI/dlmin s (dlmin is the minimum charging rate, which can be customized by electric vehicles and defaults to 10 A/ms).

According to the pulse heating curve configuration, if in the discharging pulse stage: when the device controller adjusts the discharge current to reach the set value: when ΔI/dlmin ≤50 ms, adjust the discharge current to be consistent with the command value within a maximum of 50 ms; WhenΔI/dlmin>50 ms, adjust the discharge current to match the command value within the longest ΔI/dlmin s (dlmin is the minimum discharge rate, which can be customized by electric vehicles and defaults to 10 A/ms).

The device controller periodically charges and discharges electric vehicles based on the pulse heating curve configuration. In addition, the vehicle controller and device controller send their respective status information to each other.

The vehicle controller sends a message to maintain the current working curve. If it is necessary to change the current pulse heating curve, the electric vehicle settings send a message to change the current working curve and transmit the pulse heating curve parameters that need to be changed. Wait for the charger to reply to the curve configuration result, and if the configuration is successful, maintain the current state; If the configuration fails, enter the pulse heating end stage.

After the device controller receives the changed pulse heating curve configuration, it replies to the waiting pulse heating curve configuration. If it receives the pulse heating curve configuration message, the charger determines whether the parameters of the pulse heating curve configuration message are greater than or equal to the minimum output capacity range of the charger. If they are greater than or equal to the minimum output capacity of the charger, the reply curve configuration is successful. After completing the current cycle, Work according to the modified pulse heating curve; If it is less than the minimum output capacity, the recovery curve configuration fails and enters the end stage of pulse heating.

J.2.5 Ending of pulse heating under normal conditions

Internal use only, not for resale or public post.

J.2.5.1 Ending of charger normal pulse heating

When the ending condition for pulse heating is reached, switch the working mode. The device controller sends an ending pulse heating message and reduces the pulse current to 5 A or less before disconnecting contactors C1 and C2, and then enters the relief circuit. When the voltage between the DC supply circuit DC+and DC- at the front end of contactors C1 and C2 drops below 60 V DC, the relief circuit can be disconnected. The relief circuit is physically separated from the strong current circuit.

When the device controller receives an ending pulse heating message from the vehicle, it sends an ending pulse heating message, reduces the pulse current to 5 A or less, disconnects contactors C1 and C2, and then enters the relief circuit. When the voltage between the DC supply circuit DC+and DC- at the front end of contactors C1 and C2 drops below 60 V DC, the relief circuit can be disconnected. The relief circuit is physically separated from the strong current circuit.

If the current pulse heating is stopped, the time for the voltage of the DC power supply circuit between DC+and DC-, between DC+and PE, and between DC- and PE to drop below 60 V DC from the termination of pulse heating (the device controller sends the termination pulse heating message or receives the termination pulse heating message from the electric vehicle) to the vehicle coupler shall not exceed 10 seconds.

J.2.5.2 Ending of vehicle normal pulse heating

After the vehicle controller determines that the pulse heating end condition has been reached based on the battery system, it starts sending an ending pulse heating message. After confirming that C1 and C2 are disconnected, it then disconnects C5 and C6.

When the vehicle controller receives an ending pulse heating message from the charger, it starts sending an ending pulse heating message. After confirming that C1 and C2 are disconnected, C5 and C6 are disconnected.

The pulse heating control timing for normal shutdown of pulse heating is shown in Figure J.1.

J.2.6 Ending of pulse heating under fault conditions

J.2.6.1 Ending of pulse heating by charger failure

Before the implementation of pulse heating, when the charger confirms a fault situation, the device controller sends an ending pulse heating message and confirms that the voltage between the DC power supply circuit DC+and DC-, DC+and PE, and DC- and PE at the vehicle coupler drops below 60 V DC.

During the implementation phase of pulse heating, when the charger confirms a fault situation, the following actions will be initiated simultaneously. The act time is shown in Table J.4: The equipment controller sends a message to end pulse heating and reduces the pulse current at the vehicle coupler to 5 A or less; The device controller confirms that the voltage between DC+ and DC-, DC+ and PE, and DC- and PE in the DC power supply circuit will drop below 60 V DC.

Internal use only, not for resale or public post.

The pulse heating connection process and control timing for the ending of the pulse heating fault are shown in Figure J.2, and the triggering time and Act time are shown in Table J.4.

J.2.6.2 Ending of pulse heating by vehicle fault

In the implementation phase of pulse heating, when the vehicle confirms that a fault has occurred, the vehicle controller sends a message to end the pulse heating. After confirming that the pulse current has decreased to 5 A or less and C1 and C2 are disconnected, C5 and C6 are then disconnected. The triggering time and response Act time are defined by the vehicle manufacturer.

The pulse heating connection process and control timing for the ending of the pulse heating fault are shown in Figure J 2.

J.2.7 Ending of pulse heating under emergency conditions

J.2.7.1 Emergency ending of pulse heating by charger

In the implementation stage of pulse heating, when an emergency occurs, the equipment controller informs the electric vehicle by disconnecting switch S1, or can trigger an emergency shutdown by pressing the emergency device (if equipped).

When the device controller detects an emergency situation or the voltage at detection point 1 exceeds the normal charging range (state D Table C.2 of Annex C) (trigger time defined in Table J.5), the following actions are executed simultaneously:

- within 20 ms, reduce the pulse current to 5A or below and disconnect switch S1;
- Disconnect contactors C1 and C2 within 100 ms;
- Within 1 second, reduce the voltage of the DC power supply circuit between DC+ and DC-, between DC+ and PE, and between DC- and PE to below 60 V DC;
- Send an ending pulse heating message.

After confirming that C5 and C6 are disconnected, the equipment controller put into the relief circuit. When the voltage between the DC supply circuit DC+ and DC- at the front end of contactors C1 and C2 drops below 60 V DC, the relief circuit can be disconnected and separated from the strong current circuit.

The connection process and control timing of pulse heating for emergency shutdown are shown in Figure 3, and the triggering time and act time are shown in Table J.5.

J.2.7.2 Emergency ending of pulse heating by vehicle

During the implementation phase of pulse heating, when an emergency occurs, the electric vehicle informs the charger by disconnecting switch S2.

When an electric vehicle detects its own emergency situation (trigger time defined in Table J.6), disconnect C5 and C6 within 210 ms after disconnecting switch S2; Alternatively, when the vehicle controller measures the voltage change at detection point

Internal use only, not for resale or public post.

2 and determines that the charger switch S1 is disconnected, C5 and C6 can be disconnected within 200 milliseconds. The electronic lock can only be unlocked when the vehicle coupler voltage drops below 60 V DC. Disconnect switch S2 'before disconnecting the vehicle coupler (for electric vehicles equipped with switch S2').

The connection process and control timing of pulse heating for emergency shutdown are shown in Figure J.3, and the triggering time and Act time are shown in Table J.6.

J.3 Control timing of pulse heating

A typical control timing of pulse heating is shown in Figure J.1,taking by configurating S2 'switch and normally ending the pulse heating by the vehicle as the example.

Internal use only, not for resale or public post.

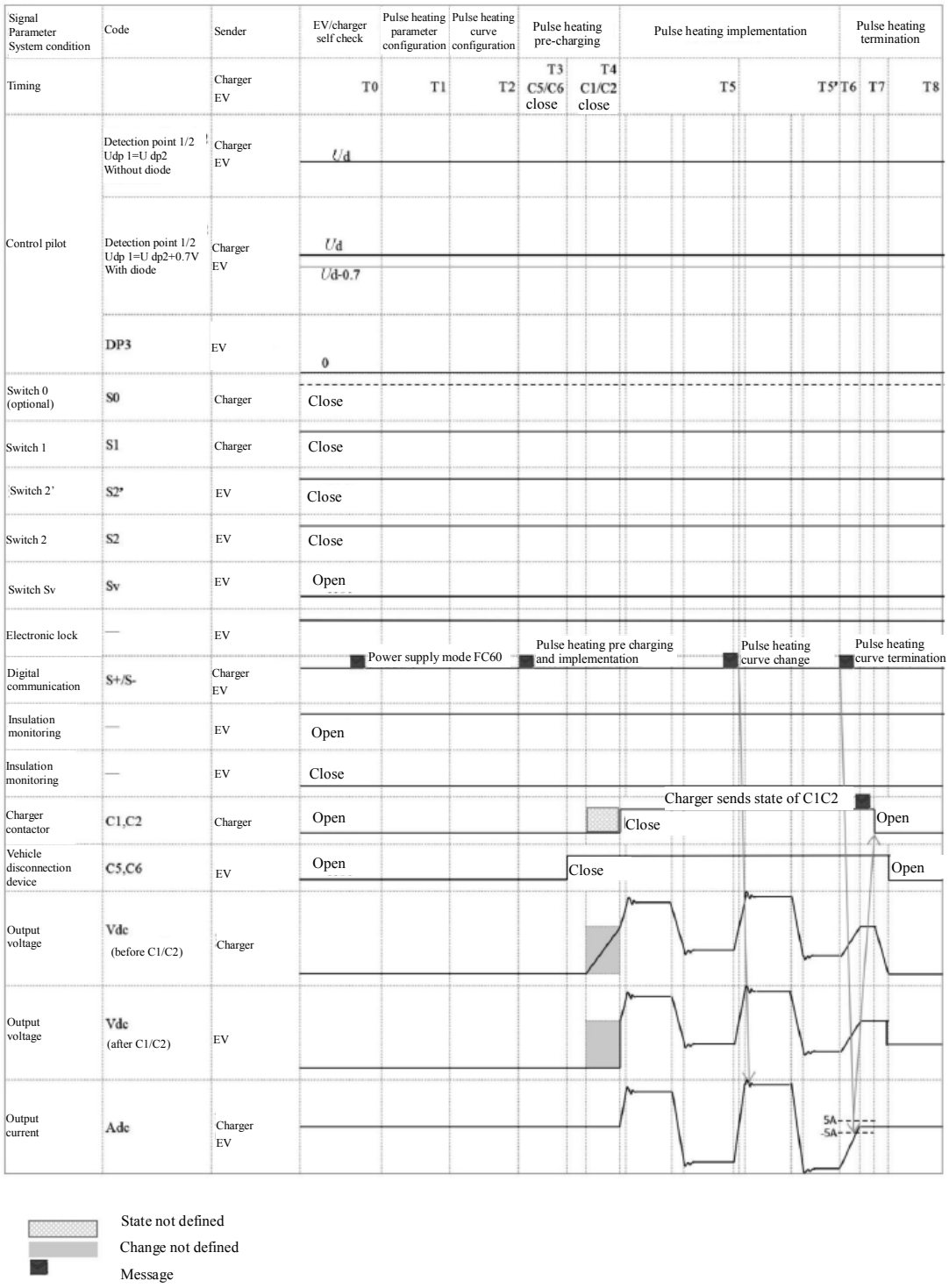

NOTEFor the voltage value at the detection point Ud,refer to corresponding voltage value under state D in Table C.2.

Figure J.1 – Control timing diagram of pulse heating (normal shutdown)

The description of the control timing of pulse heating connection corresponding to Figure J.l is shown in Table J.l.

Table J.1 - Control timing table of pulse heating (normal shutdown)

T0	Charger completes self check, and enters the power supply mode (pulse heating) function module
T1	Charger and electric vehicle conducts interaction of pulse heating stage parameter configuration between, and completies mutual confirmation
T2	Electric vehicle begins to configure pulse heating curves based on target, and charger confirms based on their capabilities
T3→T4	C5 and C6 close first, and the charger put into the bypass pre charging circuit to start pre charging. The charging circuit on the charger side is conducted at the latest before T4, (T3-T4) ≤ 5 seconds
T5	Charger closes contactors C1 and C2, enters the pulse heating implementation stage. The charger adjusts the charging and discharging voltage, current, and charging and discharging time according to the pulse heating curve configuration
T5→T5’	Electric vehicle undergoes pulse heating curve reconfiguration. After successful configuration, the charger adjusts the charging and discharging voltage, current, and charging and discharging time according to the latest pulse heating curve
T5’	Electric vehicle sends an ending pulse heating message when it reaches the end condition of pulse heating. (Figure j.1 is an example of a vehicle initiating a suspension of charging)
T5’→T6	The charger begins to reduce the pulse current to 5 A or less
T7	Charger disconnects C1 and C2,stops insulation monitoring during the pulse heating phase and put into the relief circuit to discharge the pulse output voltage
T7→T8	After disconnecting C1 and C2, disconnect C5 and C6 before T8
T8	End power supply mode (pulse heating) function module

A typical pulse heating connection process and control timing of pulse heating error shutdownare shown in Figure J.2, taking an electric vehicle equipped with an S2'switch as the example.

Internal use only, not for resale or public post.

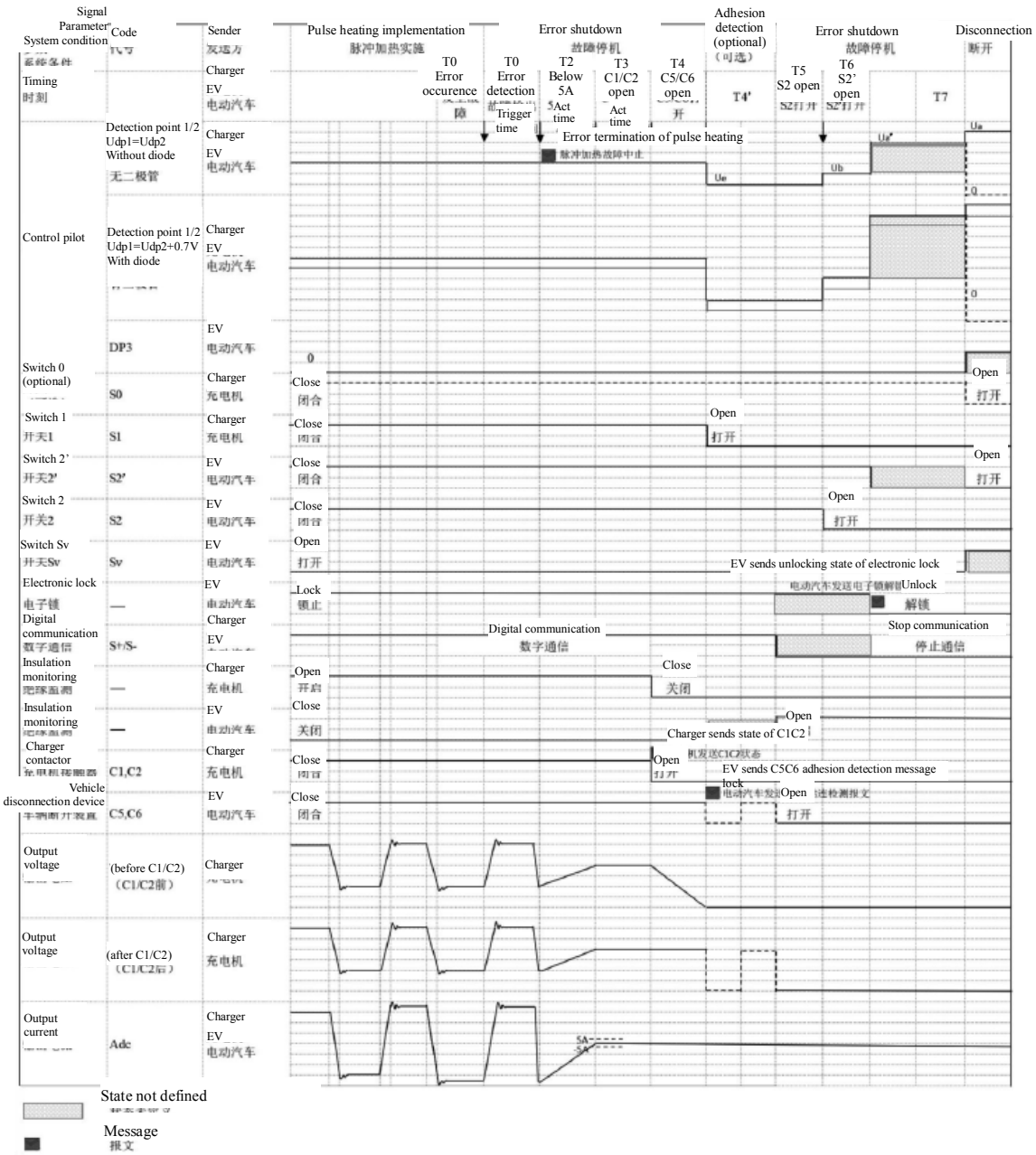

NOTEFor voltage values of detection points Ua, Ua', Ub, Ud, Ue, refer to corresponding voltage values under state A, state A', state B, state D, and state E in Table C.2.

Figure J.2 - Control timing diagram of pulse heating (error shutdown)

The description of the control timing of pulse heating connection corresponding toFigure J.2 is shown in Table J.2.

Table J.2 - Control timing table of pulse heating (error shutdown)

T0	The time when the fault occurs during the implementation phase of pulse heating. The fault list is shown in Table J.4
T1	Charger or electric vehicle detects fault situation after T0-T1 time and sends to the other party through a message. T0-T1 is the triggering time, as shown in Table J.4

Tl→T2	Charger reduces the pulse current to 5 A or less, the act time is shown in Table J.4
T3	Charger disconnects C1 and C2 and stops insulation monitoring during the pulse heating implementation phase
T4	Charger disconnects S1, and the voltage at detection point 1 is 0.88 V. If the electric vehicle does not have adhesion detection function, disconnects C5 and C6
T4→T4’	DC disconnection device adhesion detection (optional), after the detection is completed, electric vehicle disconnects C5 and C6
T5	Electric vehicle disconnects switch S2. The voltage at detection point 1 is 2.34 V
T6	Switch S2'can be disconnected (for electric vehicles equipped with switch S2'), at latest disconnect the conection device at T7. The voltage at detection point 1 is 10.8 V. T6 is the last moment when the electronic lock is opened and also the last moment when communication ends
T7	The charging connection device disconnects, and Sv returns to its default state. The voltage at detection point 1 is 12 V. The voltage at detection point 2 is 0 V

A typical pulse heating connection process and control timing of pulse heating emergency shutdown are shown in Figure J.3.

Internal use only, not for resale or public post.

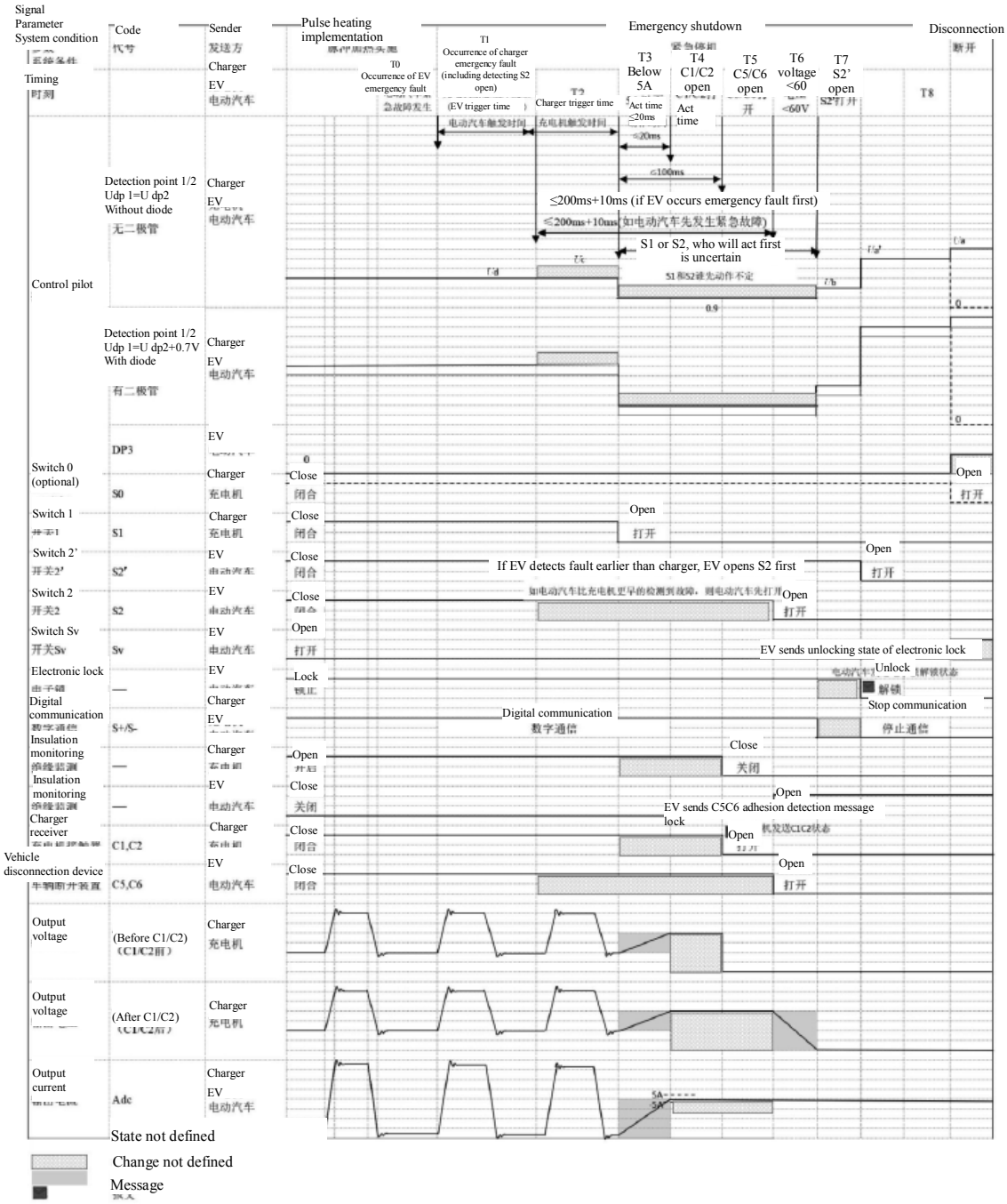

NOTEFor voltage values of detection points Ua, Ua', Ub, Uc, Ud, refer to corresponding voltage values under state A, state A', state B, state C, and state D in Table C.2.

Figure J.3 -Control timing diagram of pulse heating (emergency shutdown)

Thedescription of control timing of pulse heating connection corresponding of Figure J.3 is shown in Table J.3.

Table J.3 - Control timing table of pulse heating (emergency shutdown)

T0	Time of electric vehicle detecting the moment when an emergency situation occurs in the implementation phase of pulse heating,. Emergency situations are shown in Tables J.5 and J.6

T0→Tl	Triggering time of electric vehicle to emergency situations. The emergency situationsare shown in Table J.6. The disconnection switch S2 on the vehicle side is also an emergency situation for the charger
T1→T2	Triggering time of charger to emergency situations. The emergency situations are shown in Table J.5
T3	Charger reduces the pulse current to 5A or below. The acttime is shown in Table J.5
T4	Charger disconnects contactors C1 and C2. (T2-T4) are shown in Table J.5
T5	If C5 and C6 have not been disconnected before, disconnect them at T5 and start insulation monitoring
T6	Confirm that the voltage of the DC power supply circuit between DC+ and DC-, between DC+ and PE, and between DC- and PE at the vehicle coupler drops below 60 V DC
T7	Switch S2'can be disconnected (for electric vehicles equipped with switch S2'). at latest disconnect the conection device at T8. The voltage at detection point 1 is 10.8V. T7 is the last moment when the electronic lock is opened and also the last moment when communication ends
T8	Charging connection device disconnects, and Sv returns to its default state. The voltage at detection point 1 is 12 V, and the voltage at detection point 2 is 0 V

J.4 Pulse heating shutdown function

J.4.1 Normal stop

Normal shutdown is when an electric vehicle, charger, or user sends a request to end pulse heating without any faults. The specific execution action is shown in C.4.9.

J.4.2 Error shutdown

Error shutdown refers to the triggering of an error shutdown within a specified time when an electric vehicle or charger detects a fault (such as output overvoltage, output overcurrent, battery overvoltage, individual battery overvoltage, individual battery overheating, connector overheating, communication interruption, insulation fault, voltage mismatch, current mismatch, etc.). The specific execution actions are shown in 2.6.

The error shutdown of the charger is shown in Table J.4, and the fault items are not limited to those listed in the table. The shutdown of electric vehicles due to faults is customized by the manufacturer. When conducting consistency testing on the error shutdown of the charger, the detection mechanism checks the response time of the error shutdown, which includes the complete time of the trigger time and the Act time.

Table J.4 –Charger error shutdown

Internal use only, not for resale or public post.

<table>
<tr><th colspan="2">Fault item</th><th>Trigger time</th><th>Act time (maximum time for current to drop to 5A or below/rate of current drop)[a]</th><th>Act time [coupler voltage less than 60 V DC) (between DC+ and DC-, between DC+ and PE, between DC- and PE)] [a,b]</th></tr>
<tr><td rowspan="10">Pulse heating stage</td><td>Vehicle connector over temperature</td><td>≤5 s</td><td rowspan="4">Pulse current<100A, within 1 second;
Pulse current≥100A, at least 1 A/ms</td><td rowspan="10">≤3 s</td></tr>
<tr><td>Communication timeout (with vehicle)</td><td>≤1 s</td></tr>
<tr><td>Other faults (charger side)</td><td>≤1 s</td></tr>
<tr><td>Insulation failure during pulse heating implementation phase</td><td>≤10 s</td></tr>
<tr><td>Discharging pulse overcurrent protection[c]</td><td rowspan="4">≤200 ms</td><td rowspan="6">Pulse current<100A, within 100 ms;
Pulse current≥100A, at least 10 A/ms</td></tr>
<tr><td>Charging pulse overcurrent protection [c]</td></tr>
<tr><td>Discharging pulse undervoltage protection d</td></tr>
<tr><td>Charging pulse overvoltage protection [d]</td></tr>
<tr><td>Discharging pulse implementation timeout</td><td rowspan="2">≤500 ms</td></tr>
<tr><td>Charging pulse implementation timeout</td></tr>
<tr><td colspan="5">[a]Start timing from confirming the error.
[b]Disconnect the charger contactors C1 and C2.
[c]When any of the following situations last for 100 ms, the charger triggers anerror shutdown within the following 200 ms:
– the discharging pulseovercurrent value is greater than 110% of the the discharging pulse currentsetting value;
– the charging pulseovercurrent valueis greater than 110% of the charging pulse currentsetting value.
[d]When any of the following situations lasts for 100 ms continuously, the charger triggers anerror shutdown within the following 200 ms:
– the discharging pulseundervoltage value is less than 95% of the discharging pulse voltagesetting value;
– the charging pulse overvoltage value is greater than 105% of the charging pulse voltage setting value.</td></tr>
</table>

J.4.3 Emergency shutdown

Emergency shutdown is triggered during the pulse heating stage when an electric vehicle or charger detects a serious internal fault (such as abnormal connection of CC1, loss of protective earthing continuity, emergency shutdown, disconnection of charger S1, disconnection of vehicle S2, etc.), and the specific action is shown in J.2.7.

Emergency shutdown is shown in Table 1.5, and fault items are not limited to the ones listed in the table. When conducting consistency testing on the emergency shutdown of

Internal use only, not for resale or public post.

the charger, the detection mechanism checks the response time of the emergency shutdown, including the complete time of the trigger time and act time.

Table J.5–Charger emergency shutdown

Fault item	Trigger time	Act time (the time when the pulse current drops to 5 A or below and disconnecting S1) [a,b]	Act time (time when Cl and C2 are disconnected)[a]	Act time [coupler voltage less than 60 V DC) (between DC+ and DC-, between DC+ and PE, between DC- and PE)] [a,c]
CC1 broken wire/broken pin	≤10 ms	≤20 ms	≤100 ms	≤1 S
PE broken wire/broken pin				
Vehicle disconnect switchS2				
Receiving vehicle electronic lock unlocking information	≤1 S			
Press the emergency shutdown switch (if any)	≤70 ms			
Detect hardware remote signaling faults (such as access control, water immersion, etc.)	≤70 ms			
DC power supply circuit short circuit	≤1 s			
Other faults (charger side)	Refer to manual or relevant standards			
Discharging pulse overcurrent protection[d]	≤100 ms			
Charging pulse overcurrent protection[d]				
Discharging pulse undervoltage protection[e]				
Charging pulse overvoltage protection[e]				

[a]Start timing from confirming the error or monitoring that the voltage at detection point 1 is not in state D in Table C.2.

[b]For emergency shutdown fault occurs during the implementation phase of non pulse heating, it is not necessary to determine the requirement for current drop.

[c]Can take the method of disconnecting charger contactors C1 and C2.

[d]When any of the following situations lasts for 100 ms, the charger triggers an emergency shutdown within the following 100 ms:

- The discharging pulse overcurrent value is greater than 120% of the discharging pulse current setting value;
- The charging pulse overcurrent value is greater than 120% of the charging pulse current setting value.

[e]When any of the following situations lasts for 100 ms, the charger triggers an emergency shutdown within the following 100 ms:

- The discharging pulse undervoltage value is less than 90% of the discharging pulse voltage setting value;

Internal use only, not for resale or public post.

- The charging pulse overvoltage value is greater than 110% of the charging pulse voltage setting value.

The emergency shutdownof electric vehicles is shown in Table J.6, and the fault items are not limited to those listed in the table. When conducting consistency testing on emergency shutdown of electric vehicles, the testing agency checks the response time of emergency shutdownincluding the complete time of triggering and action.

Table J.6 - Electric vehicle emergency shutdown

Fault item	Trigger time	Act time (Time of and C5 and C6 disconnection) [a]	Act time [coupler voltage less than 60 V (between DC+ and DC-, between DC+ and PE, between DC- and PE)][a,b]
CC1 broken wire/broken pin	≤10 ms	≤200 ms	≤1 s or custom[c]
PE broken wire/broken pin			
Charger disconnects switchS1			
Other faults (vehicle side)	Custom		

[a]Start timing from confirming the fault or detecting that the voltage at detection point 2 is not within the range of state D in Table C2.
[b]Can take the mehod of disconnecting C5 and C6.
[c]Can be customizedby manufacturers.

Internal use only, not for resale or public post.

Bibliography

[1] GB/T 2900.1-2008Electrotechnical terminology—Fundamental terms

[2] GB/T 2900.71-2008 Electrotechnical terminology - Electrical installations

[3] GB/T 2900.102-2020Electrotechnical terminology—Active assisted living

[4] GB/T 7251.7Low-voltage switchgear and controlgear assemblies—Part 7:Assemblies for specific applications such as marinas,camping sites,market squares,electric vehicles charging stations

[5] GB/T 17627High-voltage test techniques for low-voltage equipment—Definitions,test and procedure requirements,test equipment

[6] GB/T 20234(all parts) Connection set of conductive charging for electric vehicles

[7] GB/T 40425(all parts) Electric vehicle top contact charging system

[8] IEC 61643-41 Low-voltage surge protective devices —Part 41: Surge protective devices connected to DC low-voltage power systems —Requirements and test methods (under development)

[9] IEC 61851-1:2017 Electric vehicle conductive charging system —Part 1: General requirements

[10] IEC 61851-23 Electric vehicle conductive charging system—Part 23: DC electric vehicle charging station ED2.0, FDIS

[11] IEC 62196-3:2014 Plugs, socket-outlets, vehicle connectors and vehicle inlets— Conductive charging of electric vehicles- Part 3: Dimensional compatibility and interchangeability requirements for d.c. and a.c./cLc. pin and contact-tube vehicle couplers

[12] ISO 17409:2020 Electrically propelled road vehicles—Connection to an external electric power supply-Safety requirements

Internal use only, not for resale or public post.